Property Location 117 PATTERSON AV | Map ID 3B/ 74/ 307/ / | Bldg Name | State Use 101
Vision ID 3334 | Account # 3388 | Bldg # 1 | Sec # 1 of 1 | Card # 1 of 1 | Print Date 11/21/2024 11:28:11 A

CURRENT OWNER	TOPO TYPE	UTILITY	STREET	LOCATION
MORRISSEY PATRICK C				
MORRISSEY NICOLLE C	TOPO WET	EASEMENT	TRAFFIC	CORNER
117 PATTERSON AV	DRAINAGE		VIEW	COMMUNITY
EAST LONGMEADOW MA 01028				

SUPPLEMENTAL DATA

Alt Prcl ID	Received
SP Permit	NIA
Chapter Land	Field 8
OC Dates	Field 9
In+Ex FY	Field 10
Mailed	Assoc Pid#

GIS ID F_376812_2852953

CURRENT ASSESSMENT

Description	Code	Appraised	Assessed
RESIDNTL.	101	211700	211,700
RES LAND	101	111000	111,000
RESIDNTL.	101	600	600
Total		323,300	323,300

1006
EAST LONGMEADOW

RECORD OF OWNERSHIP

	BK-VOL/PAGE		SALE DATE	Q/U	V/I	SALE PRICE	VC
MORRISSEY PATRICK C	21639	0231	04-13-2017	Q	I	187,500	00
DEANGELO MARY T HEIRS + DEV OF	18292	0384	05-12-2010	U	I	100	1A
DEANGELO FRED R + MARY T,	02487	0295	08-09-1956	U	I	0	

PREVIOUS ASSESSMENTS (HISTORY)

Year	Code	Assessed	Year	Code	Assessed	Year	Code	Assessed
2024	101	173,800	2023	101	159,000	2022	101	141,600
	101	111,000		101	100,900		101	91,800
	101	600		101	400		101	400
	Total	285,400		Total	260,300		Total	233,800

EXEMPTIONS

Year	Code	Description	Amount
		Total	

OTHER ASSESSMENTS

Code	Description	YEAR	Amount	Comm Int

This signature acknowledges a visit by a Data Collector or Assessor

APPRAISED VALUE SUMMARY

Appraised BLDG. Value (Card)	211,700
Appraised Xf (B) Value (Bldg)	0
Appraised Ob (B) Value (Bldg)	600
Appraised Land Value (Bldg)	111,000
Special Land Value	0
Total Appraised Parcel Value	323,300
Valuation Method	C
Adjustment	
Net Total Appraised Parcel Value	323,300

ASSESSING NEIGHBORHOOD

Nbhd	Nbhd Name		Tracing	Batch
0001			101	MA

NOTES

FY19 -PAR SP #1144 BK378-90 REC 2/22/17

TAKES 15' FROM 3B-75-306

BUILDING PERMIT RECORD

Permit Id	Issue Date	Type	Description	Amount	Insp Date	% Comp	Date Comp	Comments
B-23-394	06-06-2023	4	ADDITION	50,000	06-19-2024	100	05-10-2024	BDRM & BTH

VISIT / CHANGE HISTORY

Date	Type	Is	Id	Cd	Purpose/Result
06-19-2024			334	15	PERMIT VISIT
08-16-2019			334	2	MEASURED
02-11-2011			317	15	PERMIT VISIT
04-05-2004			317	3	MEAS+INSPCTD
09-07-1990			131	3	MEAS+INSPCTD
06-13-1980			500	3	MEAS+INSPCTD

LAND LINE VALUATION SECTION

B	Use Co	Description	Zone	D	Fronta	Depth	Land Units		Unit Price	I. Fact	S.A.	Ac Di	C. Fact	St. Idx	Adj	Notes	Special Pricing				Size A	Adj Unit Pric	Land Value
1	101	ONE FAM	RC				10,500	SF	10.57	1.000	5	LAND	1.00	MA	1.00			0			1.000	10.57	111,000
						Total Card Land Units	0.24	AC	Parcel Total Land Area:	0.24												Total Land Value	111,000

Property Location 117 PATTERSON AV | Map ID 3B/ 74/ 307/ / | Bldg Name | State Use 101
Vision ID 3334 | Account # 3388 | Bldg # 1 | Sec # 1 of 1 | Card # 1 of 1 | Print Date 11/21/2024 11:28:12 A

CONSTRUCTION DETAIL

Element	Cd	Description
Style	19	RANCH
Model	01	RESIDENTIAL
Grade	C	AVERAGE
Stories	1.00	1 STORY
Foundation	2	CONC BLOCK
Exterior Wall 1	4	VINYL
Exterior Wall 2		
Roof Structure	2	HIP
Roof Cover	1	ASPHALT SH
Interior Wall 1	1	DRYWALL
Interior Wall 2		
Interior Floor 1	4	CARPET
Interior Floor 2	3	HARDWOOD
Heat Fuel	1	OIL
Heat Type	3	FORCED H/W
AC Type	01	NONE
Bedrooms	4	
Full Baths	2	
Half Baths	0	
Extra Fixtures	2	
Total Rooms	6	
Bath Style	A	AVERAGE
Half Bath Style	N	NONE
Kitchens	1	
Kitchen Style	A	AVERAGE
Extra Kitchens	0	
Extra Kitchen St	N	NONE
FBM Sqft		
FBM Quality		
FIN ATC Sqft		
FIN ATC Quality		
Fireplaces	0	
WS Flues	0	

CONSTRUCTION DETAIL (CONTINUED)

Element	Cd	Description
Central Vac	0	NO
Basement Floor	12	CONCRETE
Bsmt Garage	1	
Units	1	

MIXED USE

Code	Description	Percentage
101	ONE FAM	100
		0
		0

COST / MARKET VALUATION

Adj Base Rate	136.43
RCN	302,480
Net Other Adj	
Year Built	1958
Effective Year Built	1991
Depreciation Code	GD
Remodel Rating	03
Year Remodeled	2024
Depreciation %	30
Functional Obsol	
External Obsol	
Cost Trend Factor	1
Condition	
% Complete	
Overall % Condition	70
RCNLD	211,700
Dep % Ovr	
Dep Ovr Comment	
Misc Imp Ovr	
Misc Imp Ovr Comment	
Cost to Cure Ovr	
Cost to Cure Ovr Comment	

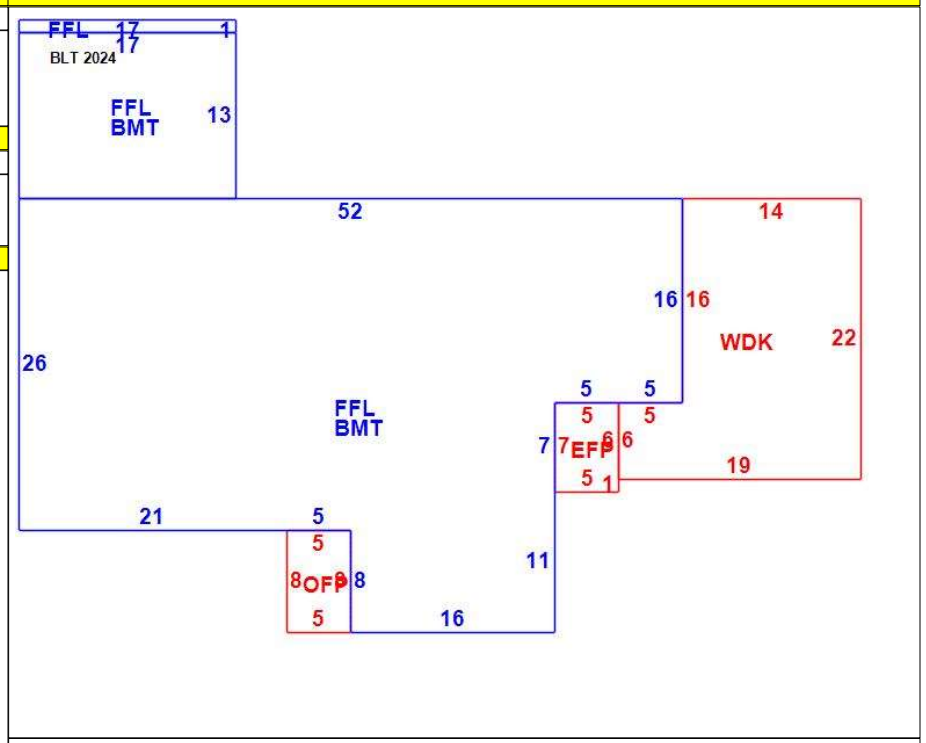

OB - OUTBUILDING & YARD ITEMS(L) / XF - BUILDING EXTRA FEATURES(B)

Code	Description	Su	Sub Type	Lan	Units	Unit Price	Yr Blt	%	Dep.	Cond	Gra	Qual	Apprais Va
02	SHED/FR			L	80	12.00	2005	60	0.00	AV	A	1.00	600

BUILDING SUB-AREA SUMMARY SECTION

Subarea	Description	Living	Gross	Eff Area	Unit Cost	Undeprec Value
BMT	BASEMENT	0	1,601		29.81	47,729
EFP	ENCL PORCH	0	35		76.71	2,685
FFL	1ST FLOOR	1,618	1,618		149.15	241,328
OFP	OPEN PORCH	0	40		14.92	597
WDK	WOOD DECK	0	338		30.01	10,142
	Ttl Gross Liv / Lease Area	1,618	3,632			302,480