Property Location 80 PROSPECT HILLS DR | Map ID 41/ 11/ 46/ / | Bldg Name | State Use 101
Vision ID 3529 | Account # 3585 | Bldg # 1 | Sec # 1 of 1 | Card # 1 of 1 | Print Date 11/22/2024 8:00:30 A

CURRENT OWNER	TOPO TYPE	UTILITY	STREET	LOCATION
FRAZIERO CARMELA A				
	TOPO WET	EASEMENT	TRAFFIC	CORNER
80 PROSPECT HILLS DR				
	DRAINAGE		VIEW	COMMUNITY
EAST LONGMEADOW MA 01028				

SUPPLEMENTAL DATA

Alt Prcl ID	Received
SP Permit HO:HO	NIA
Chapter Land	Field 8
OC Dates	Field 9
In+Ex FY	Field 10
Mailed	Assoc Pid#

GIS ID F_383751_2844500

CURRENT ASSESSMENT

Description	Code	Appraised	Assessed
RESIDNTL.	101	764900	764,900
RES LAND	101	194000	194,000
RESIDNTL.	101	3000	3,000
Total		961,900	961,900

1006

EAST LONGMEADOW

RECORD OF OWNERSHIP

	BK-VOL/PAGE		SALE DATE	Q/U	V/I	SALE PRICE	VC
FRAZIERO CARMELA A	17353	0559	06-19-2008	U	I	1	1
FRAZIERO RICHARD J,CARMELA A	11829	0025	08-27-2001	U	I	100	1A
FRAZIERO RICHARD J,CARMELA A	11223	0271	06-07-2000	U	I	100	1A
CAPUTO-CAPUA,RITA G	10918	0189	09-07-1999	U	I	100	1A
FRAZIERO FAMILY REALTY TRUST,	09125	0497	05-04-1995	U	I	1	1A

PREVIOUS ASSESSMENTS (HISTORY)

Year	Code	Assessed	Year	Code	Assessed	Year	Code	Assessed
2024	101	706,300	2023	101	654,700	2022	101	580,000
	101	194,000		101	176,400		101	181,200
	101	3,000		101	1,900		101	1,900
	Total	903,300		Total	833,000		Total	763,100

EXEMPTIONS

Year	Code	Description	Amount
		Total	

OTHER ASSESSMENTS

Code	Description	YEAR	Amount	Comm Int

This signature acknowledges a visit by a Data Collector or Assessor

ASSESSING NEIGHBORHOOD

Nbhd	Nbhd Name		Tracing	Batch
0001			101	NS

NOTES

SUB DIV #594

APPRAISED VALUE SUMMARY

Appraised BLDG. Value (Card)	764,900
Appraised Xf (B) Value (Bldg)	0
Appraised Ob (B) Value (Bldg)	3,000
Appraised Land Value (Bldg)	194,000
Special Land Value	0
Total Appraised Parcel Value	961,900
Valuation Method	C
Adjustment	
Net Total Appraised Parcel Value	961,900

BUILDING PERMIT RECORD

Permit Id	Issue Date	Type	Description	Amount	Insp Date	% Comp	Date Comp	Comments
308	10-01-2004	1	PORCH	30,000		0		ENCLOSE EXISTIN
242	08-01-1994	MN	Manual Note	390,000				DWELLING

VISIT / CHANGE HISTORY

Date	Type	Is	Id	Cd	Purpose/Result
01-04-2013			317	2	MEASURED
01-10-2007			250	11	ENTRY DENIED
01-05-2005			311	2	MEASURED
10-08-2002			250	22	MAILER SENT
10-03-2002			274	2	MEASURED
12-27-1995			107	15	PERMIT VISIT
03-06-1995			107	15	PERMIT VISIT

LAND LINE VALUATION SECTION

B	Use Co	Description	Zone	D	Fronta	Depth	Land Units		Unit Price	I. Fact	S.A.	Ac Di	C. Fact	St. Idx	Adj	Notes	Special Pricing				Size A	Adj Unit Pric	Land Value
1	101	ONE FAM	RAA				40,000	SF	3.12	1.550	2	LAND	1.00	NS	1.00			0			1.000	4.84	193,600
1	101	ONE FAM	RAA				0.050	AC	7,000.00	1.000	0		1.00	NS	1.00			0			1.000	7,000	400
						Total Card Land Units	0.97	AC	Parcel Total Land Area:	0.97												Total Land Value	194,000

Property Location 80 PROSPECT HILLS DR | Map ID 41/ 11/ 46/ / | Bldg Name | State Use 101
Vision ID 3529 | Account # 3585 | Bldg # 1 | Sec # 1 of 1 | Card # 1 of 1 | Print Date 11/22/2024 8:00:31 A

CONSTRUCTION DETAIL

Element	Cd	Description
Style	06	COLONIAL
Model	01	RESIDENTIAL
Grade	B+	GOOD (+)
Stories	2.00	2 STORY
Foundation	1	CONCRETE
Exterior Wall 1	8	BRICK VENR
Exterior Wall 2	2	CLAPBOARD
Roof Structure	2	HIP
Roof Cover	1	ASPHALT SH
Interior Wall 1	1	DRYWALL
Interior Wall 2		
Interior Floor 1	3	HARDWOOD
Interior Floor 2	4	CARPET
Heat Fuel	2	GAS
Heat Type	3	FORCED H/W
AC Type	03	FULL
Bedrooms	4	
Full Baths	4	
Half Baths	0	
Extra Fixtures	3	
Total Rooms	8	
Bath Style	G	GOOD
Half Bath Style		
Kitchens	1	
Kitchen Style	G	GOOD
Extra Kitchens	0	
Extra Kitchen St		
FBM Sqft		
FBM Quality		
FIN ATC Sqft		
FIN ATC Quality		
Fireplaces	3	
WS Flues		

CONSTRUCTION DETAIL (CONTINUED)

Element	Cd	Description
Central Vac	0	NO
Basement Floor	12	CONCRETE
Bsmt Garage		
Units	1	

MIXED USE

Code	Description	Percentage
101	ONE FAM	100
		0
		0

COST / MARKET VALUATION

Adj Base Rate	94.94
RCN	849,924
Net Other Adj	
Year Built	1994
Effective Year Built	2011
Depreciation Code	VG
Remodel Rating	
Year Remodeled	
Depreciation %	10
Functional Obsol	
External Obsol	
Cost Trend Factor	1
Condition	
% Complete	
Overall % Condition	90
RCNLD	764,900
Dep % Ovr	
Dep Ovr Comment	
Misc Imp Ovr	
Misc Imp Ovr Comment	
Cost to Cure Ovr	
Cost to Cure Ovr Comment	

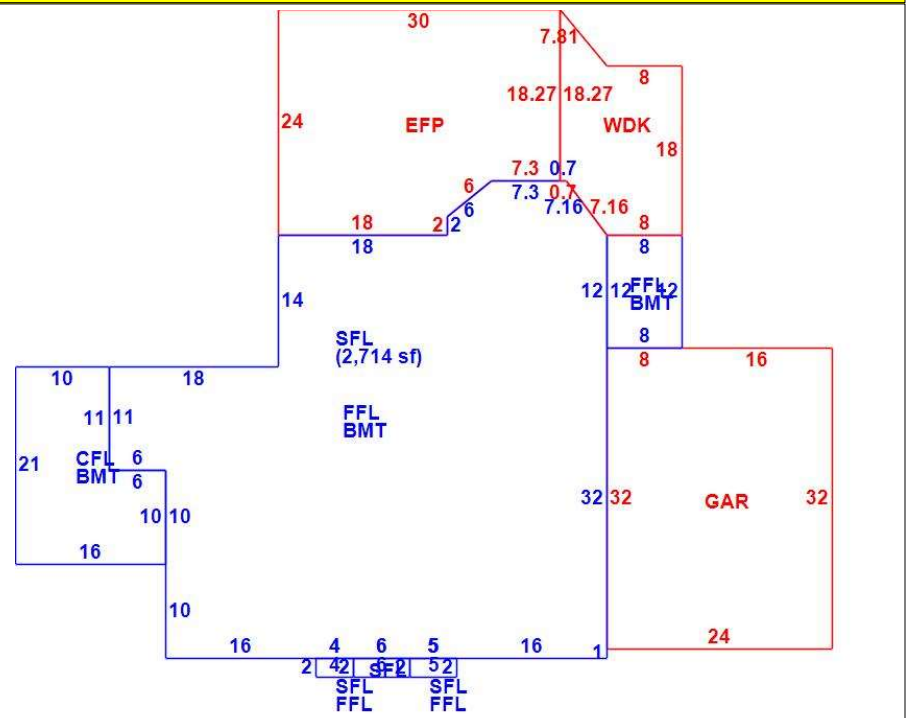

OB - OUTBUILDING & YARD ITEMS(L) / XF - BUILDING EXTRA FEATURES(B)

Code	Description	Su	Sub Type	Lan	Units	Unit Price	Yr Blt	%	Dep.	Cond	Gra	Qual	Apprais Va
02	SHED/FR			L	288	12.00	2004	70	0.00	GD	G	1.25	3,000

BUILDING SUB-AREA SUMMARY SECTION

Subarea	Description	Living	Gross	Eff Area	Unit Cost	Undeprec Value
BMT	BASEMENT	0	2,455		26.56	65,205
CFL	CATHEDRAL CE	270	270		136.74	36,919
EFP	ENCL PORCH	0	660		66.40	43,824
FFL	1ST FLOOR	2,203	2,203		132.80	292,560
GAR	GARAGE	0	768		53.09	40,770
SFL	2ND FLOOR	2,744	2,744		132.80	364,405
WDK	WOOD DECK	0	233		26.79	6,242
	Ttl Gross Liv / Lease Area	5,217	9,333			849,924