Property Location 39 PROSPECT HILLS DR | Map ID 42/ 17/ 52/ / | Bldg Name | State Use 101
Vision ID 3545 | Account # 3602 | Bldg # 1 | Sec # 1 of 1 | Card # 1 of 1 | Print Date 11/22/2024 8:02:57 A

CURRENT OWNER	TOPO TYPE	UTILITY	STREET	LOCATION
KANE MICHAEL J				
	TOPO WET	EASEMENT	TRAFFIC	CORNER
39 PROSPECT HILLS DR				
	DRAINAGE		VIEW	COMMUNITY
EAST LONGMEADOW MA 01028				

GIS ID F_384177_2843762

SUPPLEMENTAL DATA

Alt Prcl ID	Received
SP Permit	NIA
Chapter Land	Field 8
OC Dates 5/28/2021	Field 9
In+Ex FY	Field 10
Mailed	Assoc Pid#

CURRENT ASSESSMENT

Description	Code	Appraised	Assessed
RESIDNTL.	101	955700	955,700
RES LAND	101	145600	145,600
	Total	1,101,300	1,101,300

1006

EAST LONGMEADOW

RECORD OF OWNERSHIP

	BK-VOL/PAGE		SALE DATE	Q/U	V/I	SALE PRICE	VC
KANE MICHAEL J	09276	0589	10-13-1995	U	V	1	1B
PROSPECT PARTNERSHIP THE	09018	0022	12-15-1994	U	V	602,840	1
WARD JOSEPH E ETAL D/B/A	06972	0245	09-22-1988	U	I	1	1B
WARD	00000	0000		U		0	

PREVIOUS ASSESSMENTS (HISTORY)

Year	Code	Assessed	Year	Code	Assessed	Year	Code	Assessed
2024	101	882,100	2023	101	817,300	2022	101	734,500
	101	145,600		101	132,400		101	136,000
	Total	1,027,700		Total	949,700		Total	870,500

EXEMPTIONS

Year	Code	Description	Amount
		Total	

OTHER ASSESSMENTS

Code	Description	YEAR	Amount	Comm Int

This signature acknowledges a visit by a Data Collector or Assessor

ASSESSING NEIGHBORHOOD

Nbhd	Nbhd Name		Tracing	Batch
0001			130	NS

NOTES

SUB DIV #594

APPRAISED VALUE SUMMARY

Appraised BLDG. Value (Card)	955,700
Appraised Xf (B) Value (Bldg)	0
Appraised Ob (B) Value (Bldg)	0
Appraised Land Value (Bldg)	145,600
Special Land Value	0
Total Appraised Parcel Value	1,101,300
Valuation Method	C
Adjustment	
Net Total Appraised Parcel Value	1,101,300

BUILDING PERMIT RECORD

Permit Id	Issue Date	Type	Description	Amount	Insp Date	% Comp	Date Comp	Comments
201601606	10-20-2016	2	DWELLING	700,000	07-01-2020	100	07-01-2020	

VISIT / CHANGE HISTORY

Date	Type	Is	Id	Cd	Purpose/Result
05-10-2021			400	6	INFO BY PHON
02-22-2021			400	24	ABATEMENT VI
07-01-2020			334	15	PERMIT VISIT
05-28-2019			334	15	PERMIT VISIT
06-18-2018			333	15	PERMIT VISIT
06-22-2017			317	3	MEAS+INSPCTD
04-05-2017			317	15	PERMIT VISIT

LAND LINE VALUATION SECTION

B	Use Co	Description	Zone	D	Fronta	Depth	Land Units		Unit Price	I. Fact	S.A.	Ac Di	C. Fact	St. Idx	Adj	Notes	Special Pricing				Size A	Adj Unit Pric	Land Value
1	101	ONE FAM	RAA				40,000	SF	3.12	1.550	2	LAND	0.75	NS	1.00	WET3		0			1.000	3.63	145,200
1	101	ONE FAM	RAA				0.070	AC	7,000.00	1.000	0		0.75	NS	1.00	WET3		0			1.000	5,250	400
						Total Card Land Units	0.99	AC	Parcel Total Land Area:	0.99												Total Land Value	145,600

Property Location 39 PROSPECT HILLS DR | Map ID 42/ 17/ 52/ / | Bldg Name | State Use 101
Vision ID 3545 | Account # 3602 | Bldg # 1 | Sec # 1 of 1 | Card # 1 of 1 | Print Date 11/22/2024 8:02:57 A

CONSTRUCTION DETAIL

Element	Cd	Description
Style	06	COLONIAL
Model	01	RESIDENTIAL
Grade	A	VERY GOOD
Stories	2.00	2 STORY
Foundation	1	CONCRETE
Exterior Wall 1	2	CLAPBOARD
Exterior Wall 2	16	STONE VENR
Roof Structure	2	HIP
Roof Cover	1	ASPHALT SH
Interior Wall 1	1	DRYWALL
Interior Wall 2		
Interior Floor 1	3	HARDWOOD
Interior Floor 2	4	CARPET
Heat Fuel	2	GAS
Heat Type	1	FORCED H/A
AC Type	03	FULL
Bedrooms	4	
Full Baths	3	
Half Baths	2	
Extra Fixtures	4	
Total Rooms	9	
Bath Style	G	GOOD
Half Bath Style	G	GOOD
Kitchens	1	
Kitchen Style	G	GOOD
Extra Kitchens		
Extra Kitchen St		
FBM Sqft		
FBM Quality		
FIN ATC Sqft		
FIN ATC Quality		
Fireplaces	1	
WS Flues		

CONSTRUCTION DETAIL (CONTINUED)

Element	Cd	Description
Central Vac	1	YES
Basement Floor	12	CONCRETE
Bsmt Garage		
Units	1	

MIXED USE

Code	Description	Percentage
101	ONE FAM	100
		0
		0

COST / MARKET VALUATION

Adj Base Rate	95.49
RCN	1,038,853
Net Other Adj	
Year Built	2017
Effective Year Built	2018
Depreciation Code	GD
Remodel Rating	
Year Remodeled	
Depreciation %	3
Functional Obsol	5
External Obsol	
Cost Trend Factor	1
Condition	
% Complete	
Overall % Condition	92
RCNLD	955,700
Dep % Ovr	
Dep Ovr Comment	
Misc Imp Ovr	
Misc Imp Ovr Comment	
Cost to Cure Ovr	
Cost to Cure Ovr Comment	

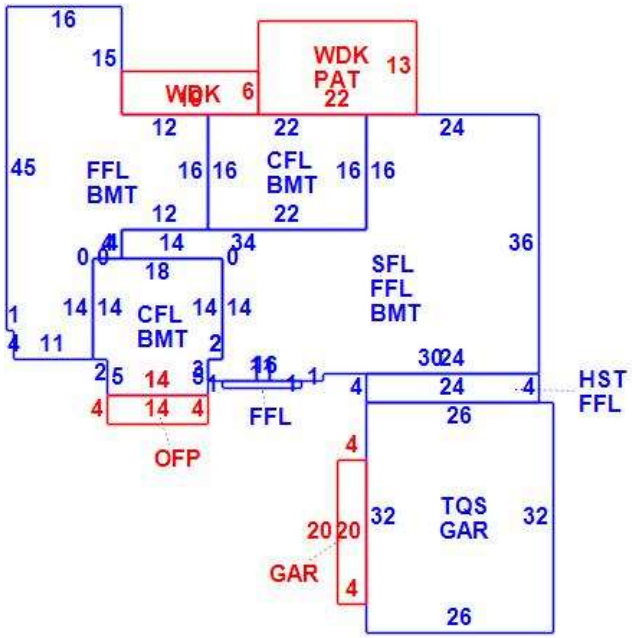

OB - OUTBUILDING & YARD ITEMS(L) / XF - BUILDING EXTRA FEATURES(B)

Code	Description	Su	Sub Type	Lan	Units	Unit Price	Yr Blt	%	Dep.	Cond	Gra	Qual	Apprais Va

BUILDING SUB-AREA SUMMARY SECTION

Subarea	Description	Living	Gross	Eff Area	Unit Cost	Undeprec Value
BMT	BASEMENT	0	2,930		33.95	99,472
CFL	CATHEDRAL CE	674	674		174.78	117,805
FFL	1ST FLOOR	2,363	2,363		169.75	401,113
GAR	GARAGE	0	912		67.94	61,958
HST	HALF STORY	48	96		84.87	8,148
OFP	OPEN PORCH	0	56		18.19	1,018
PAT	PATIO	0	286		8.31	2,376
SFL	2ND FLOOR	1,340	1,340		169.75	227,461
TQS	3/4 STORY	624	832		127.31	105,922
WDK	WOOD DECK	0	400		33.95	13,580
	Ttl Gross Liv / Lease Area	5,049	9,889			1,038,853