Property Location 68 NORTH CIRCLE DR | Map ID 47/ 10/ 32/ / | Bldg Name | State Use 101
Vision ID 3701 | Account # 3765 | Bldg # 1 | Sec # 1 of 1 | Card # 1 of 1 | Print Date 11/22/2024 8:26:29 A

CURRENT OWNER	TOPO TYPE	UTILITY	STREET	LOCATION
LOCKERY CHRISTOPHER				
LOCKERY MICHAL	TOPO WET	EASEMENT	TRAFFIC	CORNER
68 NORTH CIRCLE DR	DRAINAGE		VIEW	COMMUNITY
EAST LONGMEADOW MA 01028				

GIS ID F_385388_2856147

SUPPLEMENTAL DATA

Alt Prcl ID	Received
SP Permit	NIA
Chapter Land	Field 8
OC Dates	Field 9
In+Ex FY	Field 10
Mailed	Assoc Pid#

CURRENT ASSESSMENT

Description	Code	Appraised	Assessed
RESIDNTL.	101	305700	305,700
RES LAND	101	138800	138,800
RESIDNTL.	101	1200	1,200
Total		445,700	445,700

1006
EAST LONGMEADOW

RECORD OF OWNERSHIP

	BK-VOL/PAGE		SALE DATE	Q/U	V/I	SALE PRICE	VC
LOCKERY CHRISTOPHER	25161	0150	09-20-2023	Q	I	445,000	00
ANEKSTEIN JEREMY	23602	0562	12-21-2020	Q	I	365,000	00
MCDONALD JASON MICHAEL NOGA	22048	0516	02-01-2018	U	I	330,000	1
LORTIE LEO M	21642	0390	04-14-2017	U	I	150,000	1
SUNTER EDWARD P JR	21533	0274	01-13-2017	U	I	100	1A

PREVIOUS ASSESSMENTS (HISTORY)

Year	Code	Assessed	Year	Code	Assessed	Year	Code	Assessed
2024	101	282,900	2023	101	264,100	2022	101	238,600
	101	138,800		101	126,300		101	113,700
	101	1,200		101	700		101	700
	Total	422,900		Total	391,100		Total	353,000

EXEMPTIONS

Year	Code	Description	Amount
		Total	

OTHER ASSESSMENTS

Code	Description	YEAR	Amount	Comm Int

This signature acknowledges a visit by a Data Collector or Assessor

ASSESSING NEIGHBORHOOD

Nbhd	Nbhd Name		Tracing	Batch
0001			101	MG

NOTES

APPRAISED VALUE SUMMARY

Appraised BLDG. Value (Card)	305,700
Appraised Xf (B) Value (Bldg)	0
Appraised Ob (B) Value (Bldg)	1,200
Appraised Land Value (Bldg)	138,800
Special Land Value	0
Total Appraised Parcel Value	445,700
Valuation Method	C
Adjustment	
Net Total Appraised Parcel Value	445,700

BUILDING PERMIT RECORD

Permit Id	Issue Date	Type	Description	Amount	Insp Date	% Comp	Date Comp	Comments
B-23-78	02-07-2023	12	REROOF	6,896	05-31-2023	100	03-07-2023	RIGHT SLOPE & D
201802853	09-25-2018	91	INSULATION	2,600		0		
201701876	06-27-2017	7	REMODEL	43,000	02-28-2018	100	02-28-2018	INT & EXT ADD DE
B-24-691	10-17-224	14	MIN ALT	6,300		0		CLOSE DOOR OPE

VISIT / CHANGE HISTORY

Date	Type	Is	Id	Cd	Purpose/Result
05-31-2023			400	15	PERMIT VISIT
02-28-2018			333	15	PERMIT VISIT
06-29-2017			317	14	INSPECTED
05-20-2011			317	2	MEASURED
09-12-2002			250	22	MAILER SENT
09-05-2002			274	2	MEASURED
05-21-1992			170	11	ENTRY DENIED

LAND LINE VALUATION SECTION

B	Use Co	Description	Zone	D	Fronta	Depth	Land Units		Unit Price	I. Fact	S.A.	Ac Di	C. Fact	St. Idx	Adj	Notes	Special Pricing				Size A	Adj Unit Pric	Land Value
1	101	ONE FAM	RA				19,915	SF	5.81	1.200	7	LAND	1.00	MG	1.00			0			1.000	6.97	138,800
						Total Card Land Units	0.46	AC	Parcel Total Land Area:			0.46										Total Land Value	138,800

Property Location 68 NORTH CIRCLE DR | Map ID 47/ 10/ 32/ / | Bldg Name | State Use 101
Vision ID 3701 | Account # 3765 | Bldg # 1 | Sec # 1 of 1 | Card # 1 of 1 | Print Date 11/22/2024 8:26:29 A

CONSTRUCTION DETAIL

Element	Cd	Description
Style	21	SPLIT LEVL
Model	01	RESIDENTIAL
Grade	C+	AVG. (+)
Stories	1.75	1 3/4 STORIES
Foundation	1	CONCRETE
Exterior Wall 1	4	VINYL
Exterior Wall 2		
Roof Structure	1	GABLE
Roof Cover	1	ASPHALT SH
Interior Wall 1	1	DRYWALL
Interior Wall 2		
Interior Floor 1	3	HARDWOOD
Interior Floor 2		
Heat Fuel	1	OIL
Heat Type	1	FORCED H/A
AC Type	03	FULL
Bedrooms	4	
Full Baths	2	
Half Baths	0	
Extra Fixtures	0	
Total Rooms	7	
Bath Style	G	GOOD
Half Bath Style	N	NONE
Kitchens	1	
Kitchen Style	G	GOOD
Extra Kitchens	0	
Extra Kitchen St	N	NONE
FBM Sqft	460	
FBM Quality	3	
FIN ATC Sqft		
FIN ATC Quality		
Fireplaces	1	
WS Flues	0	

CONSTRUCTION DETAIL (CONTINUED)

Element	Cd	Description
Central Vac	0	NO
Basement Floor	12	CONCRETE
Bsmt Garage	0	
Units	1	

MIXED USE

Code	Description	Percentage
101	ONE FAM	100
		0
		0

COST / MARKET VALUATION

Adj Base Rate	134.58
RCN	351,400
Net Other Adj	
Year Built	1960
Effective Year Built	2008
Depreciation Code	EX
Remodel Rating	05
Year Remodeled	2017
Depreciation %	13
Functional Obsol	
External Obsol	
Cost Trend Factor	1
Condition	
% Complete	
Overall % Condition	87
RCNLD	305,700
Dep % Ovr	
Dep Ovr Comment	
Misc Imp Ovr	
Misc Imp Ovr Comment	
Cost to Cure Ovr	
Cost to Cure Ovr Comment	

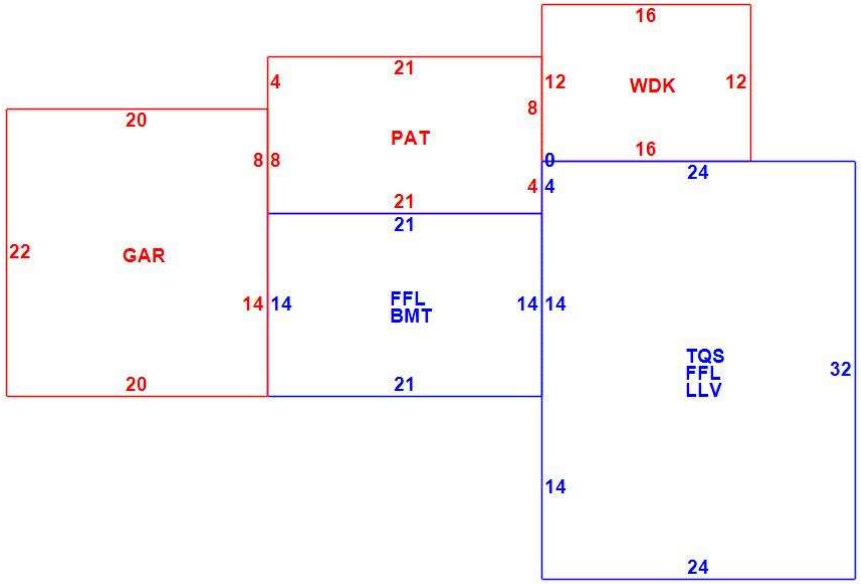

OB - OUTBUILDING & YARD ITEMS(L) / XF - BUILDING EXTRA FEATURES(B)

Code	Description	Su	Sub Type	Lan	Units	Unit Price	Yr Blt	%	Dep.	Cond	Gra	Qual	Apprais Va
02	SHED/FR			L	160	12.00	1969	60	0.00	AV	A	1.00	1,200

BUILDING SUB-AREA SUMMARY SECTION

Subarea	Description	Living	Gross	Eff Area	Unit Cost	Undeprec Value
BMT	BASEMENT	0	294		33.33	9,798
FFL	1ST FLOOR	1,062	1,062		166.07	176,364
GAR	GARAGE	0	440		66.43	29,228
LLV	LOWR LEVEL	0	768		41.52	31,885
PAT	PATIO	0	252		8.57	2,159
TQS	3/4 STORY	576	768		124.55	95,655
WDK	WOOD DECK	0	192		32.87	6,311
	Ttl Gross Liv / Lease Area	1,638	3,776			351,400