Property Location 65 COLONY DR | Map ID 48/ 16/ 110A/ / | Bldg Name | State Use 101
Vision ID 3795 | Account # 3861 | Bldg # 1 | Sec # 1 of 1 | Card # 1 of 1 | Print Date 11/22/2024 8:40:28 A

CURRENT OWNER	TOPO TYPE	UTILITY	STREET	LOCATION
PIVIN GREGORY M				
GRECHKA-PIVIN GALINA	TOPO WET	EASEMENT	TRAFFIC	CORNER
65 COLONY DR	DRAINAGE		VIEW	COMMUNITY
EAST LONGMEADOW MA 01028				

SUPPLEMENTAL DATA

Alt Prcl ID	Received
SP Permit	NIA
Chapter Land	Field 8
OC Dates	Field 9
In+Ex FY	Field 10
Mailed	Assoc Pid#

GIS ID F_385018_2854507

CURRENT ASSESSMENT

Description	Code	Appraised	Assessed
RESIDNTL.	101	394800	394,800
RES LAND	101	135100	135,100
Total		529,900	529,900

1006

EAST LONGMEADOW

RECORD OF OWNERSHIP

	BK-VOL/PAGE		SALE DATE	Q/U	V/I	SALE PRICE	VC
PIVIN GREGORY M	19078	0200	01-12-2012	U	I	325,000	00
PELLETIER MICHAEL J,	12024	0508	12-10-2001	U	I	285,723	1
LACHAPELLE,RICHARD W JR	11575	0242	04-03-2001	U	V	47,000	
ANDERSON WILLIAM H +,	08540	0542	08-27-1993	U	V	175,000	1
CAIRNS ROBERT E HEIRS +	03068	0036	10-19-1964	U	I	0	

PREVIOUS ASSESSMENTS (HISTORY)

Year	Code	Assessed	Year	Code	Assessed	Year	Code	Assessed
2024	101	369,200	2023	101	339,000	2022	101	309,800
	101	135,100		101	122,900		101	110,800
	Total	504,300		Total	461,900		Total	420,600

EXEMPTIONS

Year	Code	Description	Amount
		Total	

OTHER ASSESSMENTS

Code	Description	YEAR	Amount	Comm Int

This signature acknowledges a visit by a Data Collector or Assessor

ASSESSING NEIGHBORHOOD

Nbhd	Nbhd Name		Tracing	Batch
0001			101	MG

NOTES

APPRAISED VALUE SUMMARY

Appraised BLDG. Value (Card)	394,800
Appraised Xf (B) Value (Bldg)	0
Appraised Ob (B) Value (Bldg)	0
Appraised Land Value (Bldg)	135,100
Special Land Value	0
Total Appraised Parcel Value	529,900
Valuation Method	C
Adjustment	
Net Total Appraised Parcel Value	529,900

BUILDING PERMIT RECORD

Permit Id	Issue Date	Type	Description	Amount	Insp Date	% Comp	Date Comp	Comments
130	06-05-2001	2	DWELLING	140,000				

VISIT / CHANGE HISTORY

Date	Type	Is	Id	Cd	Purpose/Result
05-14-2018			333	2	MEASURED
03-30-2010			316	14	INSPECTED
03-23-2010			316	2	MEASURED
09-18-2002			274	14	INSPECTED
08-20-2002			250	22	MAILER SENT
08-15-2002			274	2	MEASURED
12-10-2001			105	2	MEASURED

LAND LINE VALUATION SECTION

B	Use Co	Description	Zone	D	Fronta	Depth	Land Units		Unit Price	I. Fact	S.A.	Ac Di	C. Fact	St. Idx	Adj	Notes	Special Pricing				Size A	Adj Unit Pric	Land Value
1	101	ONE FAM	RA				13,904	SF	8.10	1.200	7	LAND	1.00	MG	1.00			0			1.000	9.72	135,100
						Total Card Land Units	0.32	AC	Parcel Total Land Area:			0.32										Total Land Value	135,100

Property Location 65 COLONY DR | Map ID 48/ 16/ 110A/ / | Bldg Name | State Use 101
Vision ID 3795 | Account # 3861 | Bldg # 1 | Sec # 1 of 1 | Card # 1 of 1 | Print Date 11/22/2024 8:40:28 A

CONSTRUCTION DETAIL

Element	Cd	Description
Style	06	COLONIAL
Model	01	RESIDENTIAL
Grade	B-	GOOD (-)
Stories	2.00	2 STORY
Foundation	1	CONCRETE
Exterior Wall 1	4	VINYL
Exterior Wall 2		
Roof Structure	2	HIP
Roof Cover	1	ASPHALT SH
Interior Wall 1	1	DRYWALL
Interior Wall 2		
Interior Floor 1	3	HARDWOOD
Interior Floor 2	4	CARPET
Heat Fuel	2	GAS
Heat Type	1	FORCED H/A
AC Type	03	FULL
Bedrooms	4	
Full Baths	2	
Half Baths	1	
Extra Fixtures	3	
Total Rooms	7	
Bath Style	G	GOOD
Half Bath Style	G	GOOD
Kitchens	1	
Kitchen Style	G	GOOD
Extra Kitchens	0	
Extra Kitchen St		
FBM Sqft		
FBM Quality		
FIN ATC Sqft		
FIN ATC Quality		
Fireplaces	1	
WS Flues		

CONSTRUCTION DETAIL (CONTINUED)

Element	Cd	Description
Central Vac	0	NO
Basement Floor	12	CONCRETE
Bsmt Garage		
Units	1	

MIXED USE

Code	Description	Percentage
101	ONE FAM	100
		0
		0

COST / MARKET VALUATION

Adj Base Rate	123.62
RCN	453,848
Net Other Adj	
Year Built	2001
Effective Year Built	2008
Depreciation Code	GD
Remodel Rating	
Year Remodeled	
Depreciation %	13
Functional Obsol	
External Obsol	
Cost Trend Factor	1
Condition	
% Complete	
Overall % Condition	87
RCNLD	394,800
Dep % Ovr	
Dep Ovr Comment	
Misc Imp Ovr	
Misc Imp Ovr Comment	
Cost to Cure Ovr	
Cost to Cure Ovr Comment	

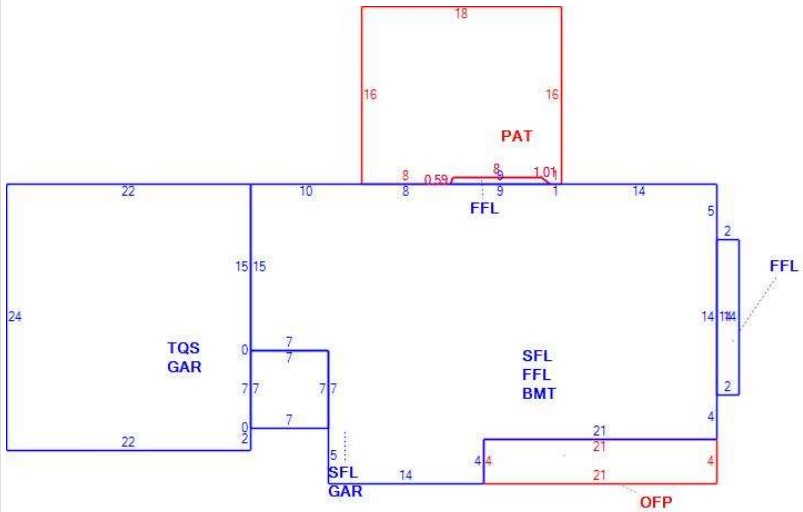

OB - OUTBUILDING & YARD ITEMS(L) / XF - BUILDING EXTRA FEATURES(B)

Code	Description	Su	Sub Type	Lan	Units	Unit Price	Yr Blt	%	Dep.	Cond	Gra	Qual	Apprais Va

BUILDING SUB-AREA SUMMARY SECTION

Subarea	Description	Living	Gross	Eff Area	Unit Cost	Undeprec Value
BMT	BASEMENT	0	966		31.75	30,670
FFL	1ST FLOOR	999	999		158.91	158,751
GAR	GARAGE	0	577		63.62	36,708
OFP	OPEN PORCH	0	84		15.13	1,271
PAT	PATIO	0	283		7.86	2,225
SFL	2ND FLOOR	1,015	1,015		158.91	161,294
TQS	3/4 STORY	396	528		119.18	62,929
	Ttl Gross Liv / Lease Area	2,410	4,452			453,848