Property Location 15 GLYNN FARMS DR | Map ID 50/ 30/ 18/ / | Bldg Name | State Use 101
Vision ID 4104 | Account # 4171 | Bldg # 1 | Sec # 1 of 1 | Card # 1 of 1 | Print Date 11/22/2024 9:27:32 A

CURRENT OWNER	TOPO TYPE	UTILITY	STREET	LOCATION
AKPAN IME I				
AKPAN MARSHA L	TOPO WET	EASEMENT	TRAFFIC	CORNER
15 GLYNN FARMS DR	DRAINAGE		VIEW	COMMUNITY
EAST LONGMEADOW MA 01028				

GIS ID F_385699_2850071

SUPPLEMENTAL DATA

Alt Prcl ID	Received
SP Permit	NIA
Chapter Land	Field 8
OC Dates	Field 9
In+Ex FY	Field 10
Mailed	Assoc Pid#

CURRENT ASSESSMENT

Description	Code	Appraised	Assessed
RESIDNTL.	101	347400	347,400
RES LAND	101	156900	156,900
Total		504,300	504,300

1006

EAST LONGMEADOW

RECORD OF OWNERSHIP

	BK-VOL/PAGE		SALE DATE	Q/U	V/I	SALE PRICE	VC
AKPAN IME I	08147	0550	08-24-1992	U	I	220,000	
DUBUC MICHAEL + SUSAN	05873	0366	08-13-1985	U	I	38,900	

PREVIOUS ASSESSMENTS (HISTORY)

Year	Code	Assessed	Year	Code	Assessed	Year	Code	Assessed
2024	101	325,300	2023	101	298,400	2022	101	270,800
	101	156,900		101	142,900		101	145,300
	Total	482,200		Total	441,300		Total	416,100

EXEMPTIONS

Year	Code	Description	Amount
		Total	

OTHER ASSESSMENTS

Code	Description	YEAR	Amount	Comm Int

This signature acknowledges a visit by a Data Collector or Assessor

ASSESSING NEIGHBORHOOD

Nbhd	Nbhd Name		Tracing	Batch
0001			101	NV

NOTES

APPRAISED VALUE SUMMARY

Appraised BLDG. Value (Card)	347,400
Appraised Xf (B) Value (Bldg)	0
Appraised Ob (B) Value (Bldg)	0
Appraised Land Value (Bldg)	156,900
Special Land Value	0
Total Appraised Parcel Value	504,300
Valuation Method	C
Adjustment	
Net Total Appraised Parcel Value	504,300

BUILDING PERMIT RECORD

Permit Id	Issue Date	Type	Description	Amount	Insp Date	% Comp	Date Comp	Comments
201702289	08-18-2017	91	INSULATION	3,655		0		

VISIT / CHANGE HISTORY

Date	Type	Is	Id	Cd	Purpose/Result
07-02-2018			333	3	MEAS+INSPCTD
09-04-2009			375	1	LEFT NOTICE
06-21-2002			250	22	MAILER SENT
06-20-2002			274	2	MEASURED
06-17-1992			131	3	MEAS+INSPCTD
03-11-1986			500	15	PERMIT VISIT

LAND LINE VALUATION SECTION

B	Use Co	Description	Zone	D	Fronta	Depth	Land Units		Unit Price	I. Fact	S.A.	Ac Di	C. Fact	St. Idx	Adj	Notes	Special Pricing				Size A	Adj Unit Pric	Land Value
1	101	ONE FAM	RAA				40,000	SF	3.12	1.250	9	LAND	1.00	NV	1.00			0			1.000	3.9	156,000
1	101	ONE FAM	RAA				0.130	AC	7,000.00	1.000	0		1.00	NV	1.00			0			1.000	7,000	900
						Total Card Land Units	1.05	AC	Parcel Total Land Area:	1.05												Total Land Value	156,900

Property Location 15 GLYNN FARMS DR | Map ID 50/ 30/ 18/ / | Bldg Name | State Use 101
Vision ID 4104 | Account # 4171 | Bldg # 1 | Sec # 1 of 1 | Card # 1 of 1 | Print Date 11/22/2024 9:27:33 A

CONSTRUCTION DETAIL

Element	Cd	Description
Style	06	COLONIAL
Model	01	RESIDENTIAL
Grade	B-	GOOD (-)
Stories	2.00	2 STORY
Foundation	2	CONC BLOCK
Exterior Wall 1	26	WOOD
Exterior Wall 2		
Roof Structure	1	GABLE
Roof Cover	1	ASPHALT SH
Interior Wall 1	1	DRYWALL
Interior Wall 2		
Interior Floor 1	4	CARPET
Interior Floor 2		
Heat Fuel	2	GAS
Heat Type	3	FORCED H/W
AC Type	03	FULL
Bedrooms	3	
Full Baths	2	
Half Baths	1	
Extra Fixtures	2	
Total Rooms	6	
Bath Style	A	AVERAGE
Half Bath Style	A	AVERAGE
Kitchens	1	
Kitchen Style	A	AVERAGE
Extra Kitchens	0	
Extra Kitchen St		
FBM Sqft	625	
FBM Quality	1	
FIN ATC Sqft		
FIN ATC Quality		
Fireplaces	1	
WS Flues		

CONSTRUCTION DETAIL (CONTINUED)

Element	Cd	Description
Central Vac	0	NO
Basement Floor		
Bsmt Garage		
Units	1	

MIXED USE

Code	Description	Percentage
101	ONE FAM	100
		0
		0

COST / MARKET VALUATION

Adj Base Rate	120.73
RCN	482,492
Net Other Adj	
Year Built	1985
Effective Year Built	1993
Depreciation Code	AG
Remodel Rating	
Year Remodeled	
Depreciation %	28
Functional Obsol	
External Obsol	
Cost Trend Factor	1
Condition	
% Complete	
Overall % Condition	72
RCNLD	347,400
Dep % Ovr	
Dep Ovr Comment	
Misc Imp Ovr	
Misc Imp Ovr Comment	
Cost to Cure Ovr	
Cost to Cure Ovr Comment	

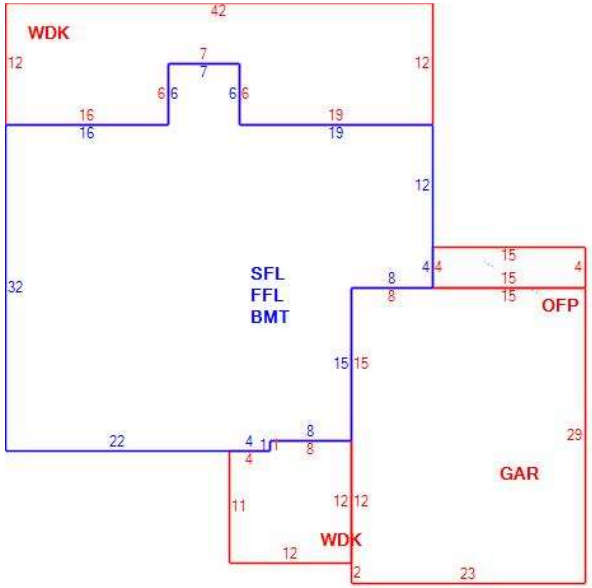

OB - OUTBUILDING & YARD ITEMS(L) / XF - BUILDING EXTRA FEATURES(B)

Code	Description	Su	Sub Type	Lan	Units	Unit Price	Yr Blt	%	Dep.	Cond	Gra	Qual	Apprais Va

BUILDING SUB-AREA SUMMARY SECTION

Subarea	Description	Living	Gross	Eff Area	Unit Cost	Undeprec Value
BMT	BASEMENT	0	1,250		30.70	38,378
FFL	1ST FLOOR	1,250	1,250		153.51	191,892
GAR	GARAGE	0	667		61.45	40,988
OFP	OPEN PORCH	0	60		15.35	921
SFL	2ND FLOOR	1,250	1,250		153.51	191,892
WDK	WOOD DECK	0	602		30.60	18,422
	Ttl Gross Liv / Lease Area	2,500	5,079			482,492