Property Location 22 GLYNN FARMS DR | Map ID 50/ 36/ 10/ / | Bldg Name | State Use 101
Vision ID 4110 | Account # 4177 | Bldg # 1 | Sec # 1 of 1 | Card # 1 of 1 | Print Date 11/22/2024 9:28:31 A

CURRENT OWNER	TOPO TYPE	UTILITY	STREET	LOCATION
DRAPALSKI HENRY J JR				
DRAPALSKI ANNE M	TOPO WET	EASEMENT	TRAFFIC	CORNER
22 GLYNN FARMS DR	DRAINAGE		VIEW	COMMUNITY
EAST LONGMEADOW MA 01028				

SUPPLEMENTAL DATA

Alt Prcl ID	Received
SP Permit HO:HO	NIA
Chapter Land	Field 8
OC Dates	Field 9
In+Ex FY	Field 10
Mailed	Assoc Pid#

GIS ID F_385637_2850380

CURRENT ASSESSMENT

Description	Code	Appraised	Assessed
RESIDNTL.	101	356300	356,300
RES LAND	101	156900	156,900
RESIDNTL.	101	7000	7,000
Total		520,200	520,200

1006
EAST LONGMEADOW

RECORD OF OWNERSHIP

	BK-VOL/PAGE		SALE DATE	Q/U	V/I	SALE PRICE	VC
DRAPALSKI HENRY J JR	16449	0082	01-16-2007	U	I	360,000	1
BADO,EMILE M	14058	0309	03-20-2004	U	I	381,250	
AITCHINSON,ROBERT L	11864	0020	09-14-2001	U	I	340,000	
BURROUGHS JOHN H + MARI T,	08799	0175	04-11-1994	U	I	248,000	
MICELOTTA STEPHEN M	05851	0496	07-12-1985	U	I	34,900	

PREVIOUS ASSESSMENTS (HISTORY)

Year	Code	Assessed	Year	Code	Assessed	Year	Code	Assessed
2024	101	328,700	2023	101	305,300	2022	101	281,100
	101	156,900		101	142,900		101	145,300
	101	7,000		101	6,400		101	6,400
	Total	492,600		Total	454,600		Total	432,800

EXEMPTIONS

Year	Code	Description	Amount
		Total	

OTHER ASSESSMENTS

Code	Description	YEAR	Amount	Comm Int

This signature acknowledges a visit by a Data Collector or Assessor

ASSESSING NEIGHBORHOOD

Nbhd	Nbhd Name		Tracing	Batch
0001			101	NV

NOTES

POOL IN SCREEN PORCH

APPRAISED VALUE SUMMARY

Appraised BLDG. Value (Card)	356,300
Appraised Xf (B) Value (Bldg)	0
Appraised Ob (B) Value (Bldg)	7,000
Appraised Land Value (Bldg)	156,900
Special Land Value	0
Total Appraised Parcel Value	520,200
Valuation Method	C
Adjustment	
Net Total Appraised Parcel Value	520,200

BUILDING PERMIT RECORD

Permit Id	Issue Date	Type	Description	Amount	Insp Date	% Comp	Date Comp	Comments
210	07-08-2011	1	PORCH	111,750	04-17-2015	100	04-17-2015	64X22 SUNROOM/
241	07-23-2010	7	REMODEL	32,452				BATH
250	10-04-1996	MN	Manual Note	450				SHED
183	07-01-1989	MN	Manual Note	30,000				POOL INS
322	01-01-1986	MN	Manual Note					SFR

VISIT / CHANGE HISTORY

Date	Type	Is	Id	Cd	Purpose/Result
04-17-2015			105	14	INSPECTED
01-07-2011			317	15	PERMIT VISIT
03-01-2010			317	16	FIELDREV CHG
09-18-2009			375	3	MEAS+INSPCTD
06-20-2002			274	3	MEAS+INSPCTD
12-20-1996			107	15	PERMIT VISIT
06-17-1992			131	1	LEFT NOTICE

LAND LINE VALUATION SECTION

B	Use Co	Description	Zone	D	Fronta	Depth	Land Units		Unit Price	I. Fact	S.A.	Ac Di	C. Fact	St. Idx	Adj	Notes	Special Pricing				Size A	Adj Unit Pric	Land Value
1	101	ONE FAM	RAA				40,000	SF	3.12	1.250	9	LAND	1.00	NV	1.00			0			1.000	3.9	156,000
1	101	ONE FAM	RAA				0.130	AC	7,000.00	1.000	0		1.00	NV	1.00			0			1.000	7,000	900
						Total Card Land Units	1.05	AC	Parcel Total Land Area:	1.05												Total Land Value	156,900

Property Location 22 GLYNN FARMS DR | Map ID 50/ 36/ 10/ / | Bldg Name | State Use 101
Vision ID 4110 | Account # 4177 | Bldg # 1 | Sec # 1 of 1 | Card # 1 of 1 | Print Date 11/22/2024 9:28:31 A

CONSTRUCTION DETAIL

Element	Cd	Description
Style	09	CONTEMPORY
Model	01	RESIDENTIAL
Grade	C+	AVG. (+)
Stories	1.50	1 1/2 STORIES
Foundation	1	CONCRETE
Exterior Wall 1	2	CLAPBOARD
Exterior Wall 2	8	BRICK VENR
Roof Structure	1	GABLE
Roof Cover	1	ASPHALT SH
Interior Wall 1	1	DRYWALL
Interior Wall 2	4	SOLID WOOD
Interior Floor 1	4	CARPET
Interior Floor 2	3	HARDWOOD
Heat Fuel	2	GAS
Heat Type	3	FORCED H/W
AC Type	03	FULL
Bedrooms	4	
Full Baths	3	
Half Baths	1	
Extra Fixtures	2	
Total Rooms	8	
Bath Style	A	AVERAGE
Half Bath Style	A	AVERAGE
Kitchens	1	
Kitchen Style	A	AVERAGE
Extra Kitchens	0	
Extra Kitchen St		
FBM Sqft		
FBM Quality		
FIN ATC Sqft		
FIN ATC Quality		
Fireplaces	1	
WS Flues		

CONSTRUCTION DETAIL (CONTINUED)

Element	Cd	Description
Central Vac	1	YES
Basement Floor	12	CONCRETE
Bsmt Garage	2	
Units	1	

MIXED USE

Code	Description	Percentage
101	ONE FAM	100
		0
		0

COST / MARKET VALUATION

Adj Base Rate	101.75
RCN	488,038
Net Other Adj	
Year Built	1986
Effective Year Built	1994
Depreciation Code	AG
Remodel Rating	
Year Remodeled	
Depreciation %	27
Functional Obsol	
External Obsol	
Cost Trend Factor	1
Condition	
% Complete	
Overall % Condition	73
RCNLD	356,300
Dep % Ovr	
Dep Ovr Comment	
Misc Imp Ovr	
Misc Imp Ovr Comment	
Cost to Cure Ovr	
Cost to Cure Ovr Comment	

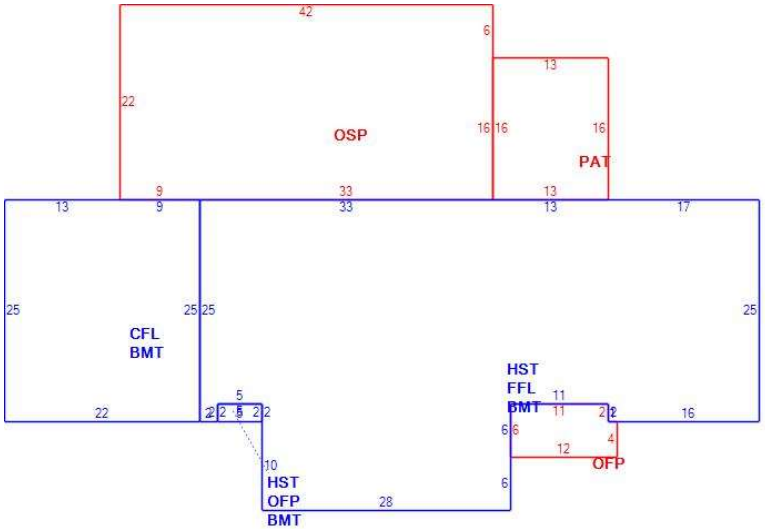

OB - OUTBUILDING & YARD ITEMS(L) / XF - BUILDING EXTRA FEATURES(B)

Code	Description	Su	Sub Type	Lan	Units	Unit Price	Yr Blt	%	Dep.	Cond	Gra	Qual	Apprais Va
11	POOL I-V	OB	Outbuildi	L	324	29.00	1989	60	0.00	AV	A	1.00	5,600
02	SHED/FR			L	150	12.00	1996	60	0.00	AV	G	1.25	1,400

BUILDING SUB-AREA SUMMARY SECTION

Subarea	Description	Living	Gross	Eff Area	Unit Cost	Undeprec Value
BMT	BASEMENT	0	2,383		24.79	59,070
CFL	CATHEDRAL CE	550	550		127.66	70,215
FFL	1ST FLOOR	1,823	1,823		123.84	225,753
HST	HALF STORY	917	1,833		61.95	113,558
OFP	OPEN PORCH	0	80		12.38	991
OSP	SCRN PORCH	0	924		18.63	17,213
PAT	PATIO	0	208		5.95	1,238
	Ttl Gross Liv / Lease Area	3,290	7,801			488,038