Property Location 103 LEE ST | Map ID 54/ 24/ 3/ / | Bldg Name | State Use 101
Vision ID 4277 | Account # 4346 | Bldg # 1 | Sec # 1 of 1 | Card # 1 of 1 | Print Date 11/22/2024 9:53:27 A

CURRENT OWNER	TOPO TYPE	UTILITY	STREET	LOCATION
SIRARD REALTY TRUST				
	TOPO WET	EASEMENT	TRAFFIC	CORNER
103 LEE ST				
	DRAINAGE		VIEW	COMMUNITY
EAST LONGMEADOW MA 01028				

SUPPLEMENTAL DATA

Alt Prcl ID	Received
SP Permit	NIA
Chapter Land	Field 8
OC Dates	Field 9
In+Ex FY	Field 10
Mailed	Assoc Pid#

GIS ID F_386371_2843646

CURRENT ASSESSMENT

Description	Code	Appraised	Assessed
RESIDNTL.	101	387600	387,600
RES LAND	101	111500	111,500
Total		499,100	499,100

1006

EAST LONGMEADOW

RECORD OF OWNERSHIP

	BK-VOL/PAGE		SALE DATE	Q/U	V/I	SALE PRICE	VC
SIRARD REALTY TRUST	10664	0243	02-26-1999	U	I	100	1A
SIRARD ESTELLE P,	07674	0175	04-10-1991	U	I	1	1A
SIRARD FREDERICK J +	06619	0105	09-10-1987	U	I	50,000	
SIRARD	06596	0317	08-18-1987	U	I	1	
REILLY	06108	0235	06-06-1986	U	V	160,000	

PREVIOUS ASSESSMENTS (HISTORY)

Year	Code	Assessed	Year	Code	Assessed	Year	Code	Assessed
2024	101	362,300	2023	101	336,300	2022	101	305,600
	101	111,500		101	101,900		101	91,900
	Total	473,800		Total	438,200		Total	397,500

EXEMPTIONS

Year	Code	Description	Amount
		Total	

OTHER ASSESSMENTS

Code	Description	YEAR	Amount	Comm Int

This signature acknowledges a visit by a Data Collector or Assessor

APPRAISED VALUE SUMMARY

Appraised BLDG. Value (Card)	387,600
Appraised Xf (B) Value (Bldg)	0
Appraised Ob (B) Value (Bldg)	0
Appraised Land Value (Bldg)	111,500
Special Land Value	0
Total Appraised Parcel Value	499,100
Valuation Method	C
Adjustment	
Net Total Appraised Parcel Value	499,100

ASSESSING NEIGHBORHOOD

Nbhd	Nbhd Name		Tracing	Batch
0001			101	MG

NOTES

SUB DIV #517

BUILDING PERMIT RECORD

Permit Id	Issue Date	Type	Description	Amount	Insp Date	% Comp	Date Comp	Comments
61	03-01-1988	MN	Manual Note	180,000				SFR

VISIT / CHANGE HISTORY

Date	Type	Is	Id	Cd	Purpose/Result
07-03-2018			333	2	MEASURED
04-10-2009			317	3	MEAS+INSPCTD
04-16-2002			274	3	MEAS+INSPCTD
03-10-1992			170	3	MEAS+INSPCTD
11-30-1988			107	3	MEAS+INSPCTD

LAND LINE VALUATION SECTION

B	Use Co	Description	Zone	D	Fronta	Depth	Land Units		Unit Price	I. Fact	S.A.	Ac Di	C. Fact	St. Idx	Adj	Notes	Special Pricing				Size A	Adj Unit Pric	Land Value
1	101	ONE FAM	RAA				40,000	SF	3.12	1.200	7	LAND	0.81	MG	1.00	TOP2/WET2		0	TRF2	0.9	1.000	2.73	109,200
1	101	ONE FAM	RAA				0.940	AC	7,000.00	1.000	0		0.35	MG	1.00	TOP3/WET4		0			1.000	2,450	2,300
						Total Card Land Units	1.86	AC	Parcel Total Land Area:	1.86												Total Land Value	111,500

Property Location 103 LEE ST | Map ID 54/ 24/ 3/ / | Bldg Name | State Use 101
Vision ID 4277 | Account # 4346 | Bldg # 1 | Sec # 1 of 1 | Card # 1 of 1 | Print Date 11/22/2024 9:53:28 A

CONSTRUCTION DETAIL

Element	Cd	Description
Style	09	CONTEMPORY
Model	01	RESIDENTIAL
Grade	C+	AVG. (+)
Stories	1.00	1 STORY
Foundation	1	CONCRETE
Exterior Wall 1	26	WOOD
Exterior Wall 2	16	STONE VENR
Roof Structure	1	GABLE
Roof Cover	1	ASPHALT SH
Interior Wall 1	1	DRYWALL
Interior Wall 2		
Interior Floor 1	3	HARDWOOD
Interior Floor 2	6	CERAMIC TL
Heat Fuel	2	GAS
Heat Type	1	FORCED H/A
AC Type	03	FULL
Bedrooms	3	
Full Baths	2	
Half Baths	1	
Extra Fixtures	4	
Total Rooms	7	
Bath Style	V	VERY GOOD
Half Bath Style	G	GOOD
Kitchens	1	
Kitchen Style	G	GOOD
Extra Kitchens	0	
Extra Kitchen St		
FBM Sqft		
FBM Quality		
FIN ATC Sqft		
FIN ATC Quality		
Fireplaces	1	
WS Flues		

CONSTRUCTION DETAIL (CONTINUED)

Element	Cd	Description
Central Vac	1	YES
Basement Floor	12	CONCRETE
Bsmt Garage		
Units	1	

MIXED USE

Code	Description	Percentage
101	ONE FAM	100
		0
		0

COST / MARKET VALUATION

Adj Base Rate	101.83
RCN	490,654
Net Other Adj	
Year Built	1988
Effective Year Built	2000
Depreciation Code	GD
Remodel Rating	
Year Remodeled	
Depreciation %	21
Functional Obsol	
External Obsol	
Cost Trend Factor	1
Condition	
% Complete	
Overall % Condition	79
RCNLD	387,600
Dep % Ovr	
Dep Ovr Comment	
Misc Imp Ovr	
Misc Imp Ovr Comment	
Cost to Cure Ovr	
Cost to Cure Ovr Comment	

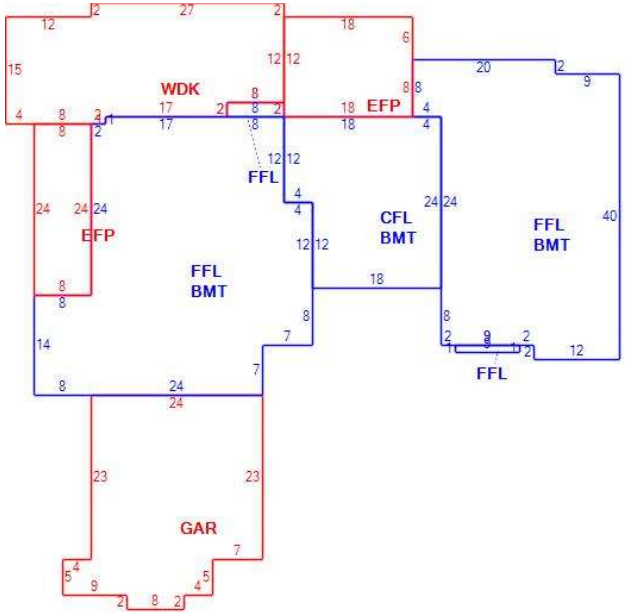

OB - OUTBUILDING & YARD ITEMS(L) / XF - BUILDING EXTRA FEATURES(B)

Code	Description	Su	Sub Type	Lan	Units	Unit Price	Yr Blt	%	Dep.	Cond	Gra	Qual	Apprais Va

BUILDING SUB-AREA SUMMARY SECTION

Subarea	Description	Living	Gross	Eff Area	Unit Cost	Undeprec Value
BMT	BASEMENT	0	2,740		24.92	68,278
CFL	CATHEDRAL CE	480	480		128.23	61,550
EFP	ENCL PORCH	0	444		62.30	27,660
FFL	1ST FLOOR	2,285	2,285		124.59	284,699
GAR	GARAGE	0	673		49.80	33,516
WDK	WOOD DECK	0	598		25.00	14,951
	Ttl Gross Liv / Lease Area	2,765	7,220			490,654