Property Location 72 SOUTH BROOK RD | Map ID 56/ 12/ 6/ / | Bldg Name | State Use 101
Vision ID 4315 | Account # 4384 | Bldg # 1 | Sec # 1 of 1 | Card # 1 of 1 | Print Date 11/22/2024 9:58:57 A

CURRENT OWNER	TOPO TYPE	UTILITY	STREET	LOCATION
ZUCCALO WILLIAM A				
ZUCCALO PHYLLIS A	TOPO WET	EASEMENT	TRAFFIC	CORNER
72 SOUTH BROOK RD	DRAINAGE		VIEW	COMMUNITY
EAST LONGMEADOW MA 01028				

SUPPLEMENTAL DATA

Alt Prcl ID	Received
SP Permit	NIA
Chapter Land	Field 8
OC Dates	Field 9
In+Ex FY	Field 10
Mailed	Assoc Pid#

GIS ID F_386730_2840459

CURRENT ASSESSMENT

Description	Code	Appraised	Assessed
RESIDNTL.	101	447900	447,900
RES LAND	101	144300	144,300
RESIDNTL.	101	1000	1,000
Total		593,200	593,200

1006
EAST LONGMEADOW

RECORD OF OWNERSHIP

	BK-VOL/PAGE		SALE DATE	Q/U	V/I	SALE PRICE	VC
ZUCCALO WILLIAM A	08066	0556	06-02-1992	U	V	62,000	
SOUTH MEADOWS INC	06343	0440	12-30-1986	U	I	1	1B
BARIBEAU ROLAND J +	00000	0000		U		0	

PREVIOUS ASSESSMENTS (HISTORY)

Year	Code	Assessed	Year	Code	Assessed	Year	Code	Assessed
2024	101	414,000	2023	101	389,300	2022	101	354,000
	101	144,300		101	131,900		101	133,900
	101	1,000		101	600		101	600
	Total	559,300		Total	521,800		Total	488,500

EXEMPTIONS

Year	Code	Description	Amount
		Total	

OTHER ASSESSMENTS

Code	Description	YEAR	Amount	Comm Int

This signature acknowledges a visit by a Data Collector or Assessor

ASSESSING NEIGHBORHOOD

Nbhd	Nbhd Name		Tracing	Batch
0001			101	NV

NOTES

SUB DIV 588,589

APPRAISED VALUE SUMMARY

Appraised BLDG. Value (Card)	447,900
Appraised Xf (B) Value (Bldg)	0
Appraised Ob (B) Value (Bldg)	1,000
Appraised Land Value (Bldg)	144,300
Special Land Value	0
Total Appraised Parcel Value	593,200
Valuation Method	C
Adjustment	
Net Total Appraised Parcel Value	593,200

BUILDING PERMIT RECORD

Permit Id	Issue Date	Type	Description	Amount	Insp Date	% Comp	Date Comp	Comments
133	06-01-1994	MN	Manual Note	150,000				DWELLING

VISIT / CHANGE HISTORY

Date	Type	Is	Id	Cd	Purpose/Result
04-17-2018			333	3	MEAS+INSPCTD
10-31-2008			317	14	INSPECTED
10-17-2008			317	2	MEASURED
04-18-2002			274	3	MEAS+INSPCTD
03-22-2002			250	22	MAILER SENT
11-26-2001			247	2	MEASURED
03-04-1996			107	3	MEAS+INSPCTD

LAND LINE VALUATION SECTION

B	Use Co	Description	Zone	D	Fronta	Depth	Land Units		Unit Price	I. Fact	S.A.	Ac Di	C. Fact	St. Idx	Adj	Notes	Special Pricing				Size A	Adj Unit Pric	Land Value
1	101	ONE FAM	RAA				40,000	SF	3.12	1.250	9	LAND	0.90	NV	1.00	TOP2		0			1.000	3.51	140,400
1	101	ONE FAM	RAA				1.120	AC	7,000.00	1.000	0		0.50	NV	1.00	TOP4		0			1.000	3,500	3,900
						Total Card Land Units	2.04	AC	Parcel Total Land Area:	2.04												Total Land Value	144,300

Property Location 72 SOUTH BROOK RD | Map ID 56/ 12/ 6/ / | Bldg Name | State Use 101
Vision ID 4315 | Account # 4384 | Bldg # 1 | Sec # 1 of 1 | Card # 1 of 1 | Print Date 11/22/2024 9:58:58 A

CONSTRUCTION DETAIL

Element	Cd	Description
Style	09	CONTEMPORY
Model	01	RESIDENTIAL
Grade	B	GOOD
Stories	2.00	2 STORY
Foundation	1	CONCRETE
Exterior Wall 1	4	VINYL
Exterior Wall 2	16	STONE VENR
Roof Structure	1	GABLE
Roof Cover	1	ASPHALT SH
Interior Wall 1	1	DRYWALL
Interior Wall 2		
Interior Floor 1	4	CARPET
Interior Floor 2	3	HARDWOOD
Heat Fuel	2	GAS
Heat Type	3	FORCED H/W
AC Type	03	FULL
Bedrooms	3	
Full Baths	3	
Half Baths	2	
Extra Fixtures	2	
Total Rooms	6	
Bath Style	G	GOOD
Half Bath Style	A	AVERAGE
Kitchens	1	
Kitchen Style	G	GOOD
Extra Kitchens	0	
Extra Kitchen St		
FBM Sqft	351	
FBM Quality	3	
FIN ATC Sqft		
FIN ATC Quality		
Fireplaces	1	
WS Flues		

CONSTRUCTION DETAIL (CONTINUED)

Element	Cd	Description
Central Vac	1	YES
Basement Floor	12	CONCRETE
Bsmt Garage		
Units	1	

MIXED USE

Code	Description	Percentage
101	ONE FAM	100
		0
		0

COST / MARKET VALUATION

Adj Base Rate	115.04
RCN	539,660
Net Other Adj	
Year Built	1994
Effective Year Built	2004
Depreciation Code	GD
Remodel Rating	
Year Remodeled	
Depreciation %	17
Functional Obsol	
External Obsol	
Cost Trend Factor	1
Condition	
% Complete	
Overall % Condition	83
RCNLD	447,900
Dep % Ovr	
Dep Ovr Comment	
Misc Imp Ovr	
Misc Imp Ovr Comment	
Cost to Cure Ovr	
Cost to Cure Ovr Comment	

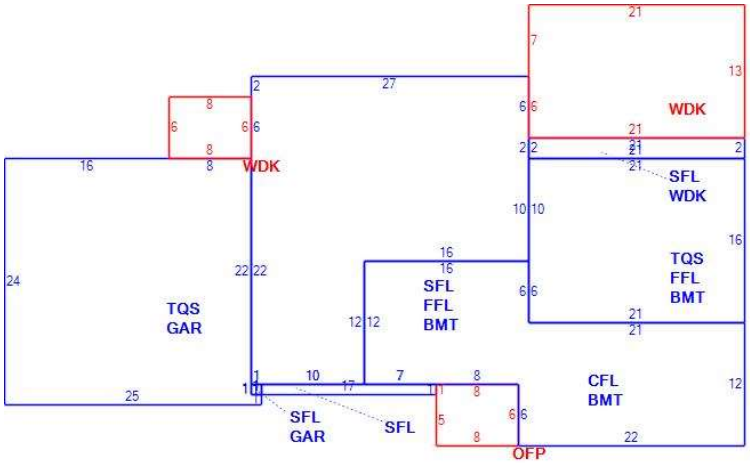

OB - OUTBUILDING & YARD ITEMS(L) / XF - BUILDING EXTRA FEATURES(B)

Code	Description	Su	Sub Type	Lan	Units	Unit Price	Yr Blt	%	Dep.	Cond	Gra	Qual	Apprais Va
02	SHED/FR			L	120	12.00	2002	70	0.00	GD	A	1.00	1,000

BUILDING SUB-AREA SUMMARY SECTION

Subarea	Description	Living	Gross	Eff Area	Unit Cost	Undeprec Value
BMT	BASEMENT	0	1,404		32.04	44,985
CFL	CATHEDRAL CE	450	450		165.07	74,281
FFL	1ST FLOOR	954	954		160.09	152,725
GAR	GARAGE	0	578		63.98	36,981
OFP	OPEN PORCH	0	48		16.68	800
SFL	2ND FLOOR	678	678		160.09	108,540
TQS	3/4 STORY	685	913		120.11	109,661
WDK	WOOD DECK	0	363		32.19	11,686
	Ttl Gross Liv / Lease Area	2,767	5,388			539,660