Property Location 126 SOUTH BROOK RD | Map ID 56/ 5/ 13/ / | Bldg Name | State Use 101
Vision ID 4320 | Account # 4389 | Bldg # 1 | Sec # 1 of 1 | Card # 1 of 1 | Print Date 11/22/2024 9:59:42 A

CURRENT OWNER	TOPO TYPE	UTILITY	STREET	LOCATION
TARBELL DANIEL S				
TARBELL NICOLE M	TOPO WET	EASEMENT	TRAFFIC	CORNER
126 SOUTH BROOK RD	DRAINAGE		VIEW	COMMUNITY
EAST LONGMEADOW MA 01028				

SUPPLEMENTAL DATA	
Alt Prcl ID	Received
SP Permit	NIA
Chapter Land	Field 8
OC Dates	Field 9
In+Ex FY	Field 10
Mailed	Assoc Pid#

GIS ID F_388047_2840739

CURRENT ASSESSMENT

Description	Code	Appraised	Assessed
RESIDNTL.	101	581100	581,100
RES LAND	101	156100	156,100
Total		737,200	737,200

1006

EAST LONGMEADOW

RECORD OF OWNERSHIP

RECORD OF OWNERSHIP	BK-VOL/PAGE		SALE DATE	Q/U	V/I	SALE PRICE	VC
TARBELL DANIEL S	23547	0581	11-20-2020	Q	I	608,000	00
LANIGAN CHARLES T	09037	0516	01-11-1995	U	I	306,500	1
TORCIA JOSEPH A +	08799	0057	04-11-1994	U	V	70,000	
SOUTH MEADOWS INC	06343	0440	12-30-1986	U	I	1	1B
BARIBEAU ROLAND J +	00000	0000		U		0	

PREVIOUS ASSESSMENTS (HISTORY)

Year	Code	Assessed	Year	Code	Assessed	Year	Code	Assessed
2024	101	536,800	2023	101	504,500	2022	101	445,300
	101	156,100		101	142,100		101	144,500
	Total	692,900		Total	646,600		Total	589,800

EXEMPTIONS

Year	Code	Description	Amount
		Total	

OTHER ASSESSMENTS

Code	Description	YEAR	Amount	Comm Int

This signature acknowledges a visit by a Data Collector or Assessor

ASSESSING NEIGHBORHOOD

Nbhd	Nbhd Name		Tracing	Batch
0001			101	NV

NOTES

APPRAISED VALUE SUMMARY

Appraised BLDG. Value (Card)	581,100
Appraised Xf (B) Value (Bldg)	0
Appraised Ob (B) Value (Bldg)	0
Appraised Land Value (Bldg)	156,100
Special Land Value	0
Total Appraised Parcel Value	737,200
Valuation Method	C
Adjustment	
Net Total Appraised Parcel Value	737,200

BUILDING PERMIT RECORD

Permit Id	Issue Date	Type	Description	Amount	Insp Date	% Comp	Date Comp	Comments
202102816	09-14-2021	91	INSULATION	7,098				
202102169	06-21-2021	7	REMODEL	43,617	06-30-2022	100	03-21-2022	REMODEL 1ST FLR
118	05-24-2001	1	PORCH	10,000				DMLSH PORCH; BU
96	05-01-1994	MN	Manual Note	200,000				DWELLING

VISIT / CHANGE HISTORY

Date	Type	Is	Id	Cd	Purpose/Result
06-30-2022			400	15	PERMIT VISIT
04-17-2018			333	2	MEASURED
10-31-2008			317	14	INSPECTED
10-17-2008			317	2	MEASURED
02-06-2003			274	15	PERMIT VISIT
04-02-2002			274	14	INSPECTED
03-22-2002			250	22	MAILER SENT

LAND LINE VALUATION SECTION

B	Use Co	Description	Zone	D	Fronta	Depth	Land Units		Unit Price	I. Fact	S.A.	Ac Di	C. Fact	St. Idx	Adj	Notes	Special Pricing				Size A	Adj Unit Pric	Land Value
1	101	ONE FAM	RAA				40,000	SF	3.12	1.250	9	LAND	1.00	NV	1.00			0			1.000	3.9	156,000
1	101	ONE FAM	RAA				0.010	AC	7,000.00	1.000	0		1.00	NV	1.00			0			1.000	7,000	100
						Total Card Land Units	0.93	AC	Parcel Total Land Area:	0.93												Total Land Value	156,100

Property Location 126 SOUTH BROOK RD | Map ID 56/ 5/ 13/ / | Bldg Name | State Use 101
Vision ID 4320 | Account # 4389 | Bldg # 1 | Sec # 1 of 1 | Card # 1 of 1 | Print Date 11/22/2024 9:59:43 A

CONSTRUCTION DETAIL

Element	Cd	Description
Style	06	COLONIAL
Model	01	RESIDENTIAL
Grade	A-	V GOOD-
Stories	2.00	2 STORY
Foundation	1	CONCRETE
Exterior Wall 1	4	VINYL
Exterior Wall 2		
Roof Structure	1	GABLE
Roof Cover	1	ASPHALT SH
Interior Wall 1	1	DRYWALL
Interior Wall 2		
Interior Floor 1	4	CARPET
Interior Floor 2	3	HARDWOOD
Heat Fuel	2	GAS
Heat Type	1	FORCED H/A
AC Type	03	FULL
Bedrooms	4	
Full Baths	3	
Half Baths	1	
Extra Fixtures	2	
Total Rooms	8	
Bath Style	G	GOOD
Half Bath Style	G	GOOD
Kitchens	1	
Kitchen Style	G	GOOD
Extra Kitchens	0	
Extra Kitchen St		
FBM Sqft		
FBM Quality		
FIN ATC Sqft		
FIN ATC Quality		
Fireplaces	1	
WS Flues		

CONSTRUCTION DETAIL (CONTINUED)

Element	Cd	Description
Central Vac	1	YES
Basement Floor	12	CONCRETE
Bsmt Garage		
Units	1	

MIXED USE

Code	Description	Percentage
101	ONE FAM	100
		0
		0

COST / MARKET VALUATION

Adj Base Rate	100.90
RCN	700,080
Net Other Adj	
Year Built	1994
Effective Year Built	2004
Depreciation Code	GD
Remodel Rating	
Year Remodeled	
Depreciation %	17
Functional Obsol	
External Obsol	
Cost Trend Factor	1
Condition	
% Complete	
Overall % Condition	83
RCNLD	581,100
Dep % Ovr	
Dep Ovr Comment	
Misc Imp Ovr	
Misc Imp Ovr Comment	
Cost to Cure Ovr	
Cost to Cure Ovr Comment	

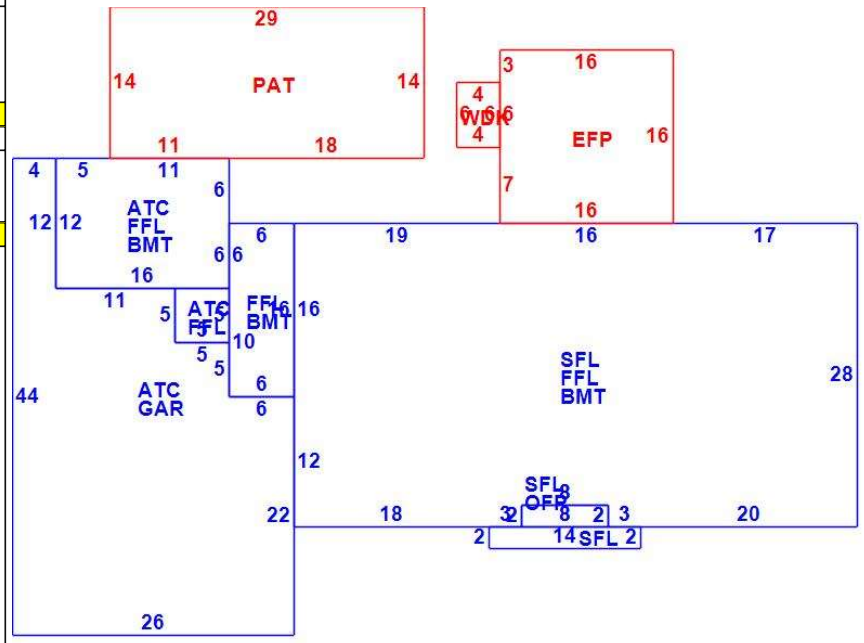

OB - OUTBUILDING & YARD ITEMS(L) / XF - BUILDING EXTRA FEATURES(B)

Code	Description	Su	Sub Type	Lan	Units	Unit Price	Yr Blt	%	Dep.	Cond	Gra	Qual	Apprais Va

BUILDING SUB-AREA SUMMARY SECTION

Subarea	Description	Living	Gross	Eff Area	Unit Cost	Undeprec Value
ATC	ATTIC	253	1,012		40.62	41,105
BMT	BASEMENT	0	1,728		32.53	56,214
EFP	ENCL PORCH	0	256		81.23	20,796
FFL	1ST FLOOR	1,753	1,753		162.47	284,809
GAR	GARAGE	0	795		64.99	51,665
OFP	OPEN PORCH	0	16		20.31	325
PAT	PATIO	0	406		8.00	3,249
SFL	2ND FLOOR	1,484	1,484		162.47	241,104
WDK	WOOD DECK	0	24		33.85	812
	Ttl Gross Liv / Lease Area	3,490	7,474			700,080