Property Location 110 SOUTH BROOK RD | Map ID 56/ 7/ 11/ / | Bldg Name | State Use 101
Vision ID 4322 | Account # 4391 | Bldg # 1 | Sec # 1 of 1 | Card # 1 of 1 | Print Date 11/22/2024 10:00:01

CURRENT OWNER	TOPO TYPE	UTILITY	STREET	LOCATION
MASENGILL MARIAN U TR				
	TOPO WET	EASEMENT	TRAFFIC	CORNER
110 SOUTH BROOK RD				
	DRAINAGE		VIEW	COMMUNITY
EAST LONGMEADOW MA 01028				

SUPPLEMENTAL DATA

Alt Prcl ID	Received
SP Permit	NIA
Chapter Land	Field 8
OC Dates	Field 9
In+Ex FY	Field 10
Mailed	Assoc Pid#

GIS ID F_387700_2840692

CURRENT ASSESSMENT

Description	Code	Appraised	Assessed
RESIDNTL.	101	511400	511,400
RES LAND	101	156100	156,100
RESIDNTL.	101	800	800
Total		668,300	668,300

1006

EAST LONGMEADOW

RECORD OF OWNERSHIP

	BK-VOL/PAGE		SALE DATE	Q/U	V/I	SALE PRICE	VC
MASENGILL MARIAN U TR	25354	0099	03-18-2024	U	I	100	1A
MASENGILL ADDISON C S	15084	0343	06-10-2005	U	I	708,000	1
SANTANIELLO,KAREN A	10629	0278	01-29-1999	U	V	1	1A
SANTANIELLO SALVATORE AND,	09122	0565	05-04-1995	U	V	1	1A
SANTANIELLO KAREN A	09049	0351	01-30-1995	U	V	1	1A

PREVIOUS ASSESSMENTS (HISTORY)

Year	Code	Assessed	Year	Code	Assessed	Year	Code	Assessed
2024	101	484,500	2023	101	445,200	2022	101	399,500
	101	156,100		101	142,100		101	144,500
	101	800		101	500		101	500
	Total	641,400		Total	587,800		Total	544,500

EXEMPTIONS

Year	Code	Description	Amount
		Total	

OTHER ASSESSMENTS

Code	Description	YEAR	Amount	Comm Int

This signature acknowledges a visit by a Data Collector or Assessor

ASSESSING NEIGHBORHOOD

Nbhd	Nbhd Name		Tracing	Batch
0001			101	NV

NOTES

SUB DIV #588,589

APPRAISED VALUE SUMMARY

Appraised BLDG. Value (Card)	511,400
Appraised Xf (B) Value (Bldg)	0
Appraised Ob (B) Value (Bldg)	800
Appraised Land Value (Bldg)	156,100
Special Land Value	0
Total Appraised Parcel Value	668,300
Valuation Method	C
Adjustment	
Net Total Appraised Parcel Value	668,300

BUILDING PERMIT RECORD

Permit Id	Issue Date	Type	Description	Amount	Insp Date	% Comp	Date Comp	Comments
305	09-16-2005	1	PORCH	9,000				9` X 18` SCREENED
41	03-01-1995	MN	Manual Note	170,000				DWELLING

VISIT / CHANGE HISTORY

Date	Type	Is	Id	Cd	Purpose/Result
11-30-2021			334	2	MEASURED
01-20-2012			317	16	FIELDREV CHG
10-24-2008			317	14	INSPECTED
10-17-2008			317	2	MEASURED
01-23-2006			311	15	PERMIT VISIT
03-22-2002			250	22	MAILER SENT
11-26-2001			247	2	MEASURED

LAND LINE VALUATION SECTION

B	Use Co	Description	Zone	D	Fronta	Depth	Land Units		Unit Price	I. Fact	S.A.	Ac Di	C. Fact	St. Idx	Adj	Notes	Special Pricing				Size A	Adj Unit Pric	Land Value
1	101	ONE FAM	RAA				40,000	SF	3.12	1.250	9	LAND	1.00	NV	1.00			0			1.000	3.9	156,000
1	101	ONE FAM	RAA				0.010	AC	7,000.00	1.000	0		1.00	NV	1.00			0			1.000	7,000	100
						Total Card Land Units	0.93	AC	Parcel Total Land Area:	0.93												Total Land Value	156,100

Property Location 110 SOUTH BROOK RD | Map ID 56/ 7/ 11/ / | Bldg Name | State Use 101
Vision ID 4322 | Account # 4391 | Bldg # 1 | Sec # 1 of 1 | Card # 1 of 1 | Print Date 11/22/2024 10:00:01

CONSTRUCTION DETAIL

Element	Cd	Description
Style	06	COLONIAL
Model	01	RESIDENTIAL
Grade	B-	GOOD (-)
Stories	2.00	2 STORY
Foundation	1	CONCRETE
Exterior Wall 1	7	BRICK
Exterior Wall 2	4	VINYL
Roof Structure	2	HIP
Roof Cover	1	ASPHALT SH
Interior Wall 1	1	DRYWALL
Interior Wall 2		
Interior Floor 1	3	HARDWOOD
Interior Floor 2	4	CARPET
Heat Fuel	1	OIL
Heat Type	1	FORCED H/A
AC Type	03	FULL
Bedrooms	4	
Full Baths	3	
Half Baths	0	
Extra Fixtures	1	
Total Rooms	9	
Bath Style	G	GOOD
Half Bath Style		
Kitchens	1	
Kitchen Style	G	GOOD
Extra Kitchens	0	
Extra Kitchen St		
FBM Sqft	1410	
FBM Quality	3	
FIN ATC Sqft		
FIN ATC Quality		
Fireplaces	1	
WS Flues		

CONSTRUCTION DETAIL (CONTINUED)

Element	Cd	Description
Central Vac	0	NO
Basement Floor	12	CONCRETE
Bsmt Garage		
Units	1	

MIXED USE

Code	Description	Percentage
101	ONE FAM	100
		0
		0

COST / MARKET VALUATION

Adj Base Rate	99.03
RCN	616,165
Net Other Adj	
Year Built	1995
Effective Year Built	2004
Depreciation Code	GD
Remodel Rating	
Year Remodeled	
Depreciation %	17
Functional Obsol	
External Obsol	
Cost Trend Factor	1
Condition	
% Complete	
Overall % Condition	83
RCNLD	511,400
Dep % Ovr	
Dep Ovr Comment	
Misc Imp Ovr	
Misc Imp Ovr Comment	
Cost to Cure Ovr	
Cost to Cure Ovr Comment	

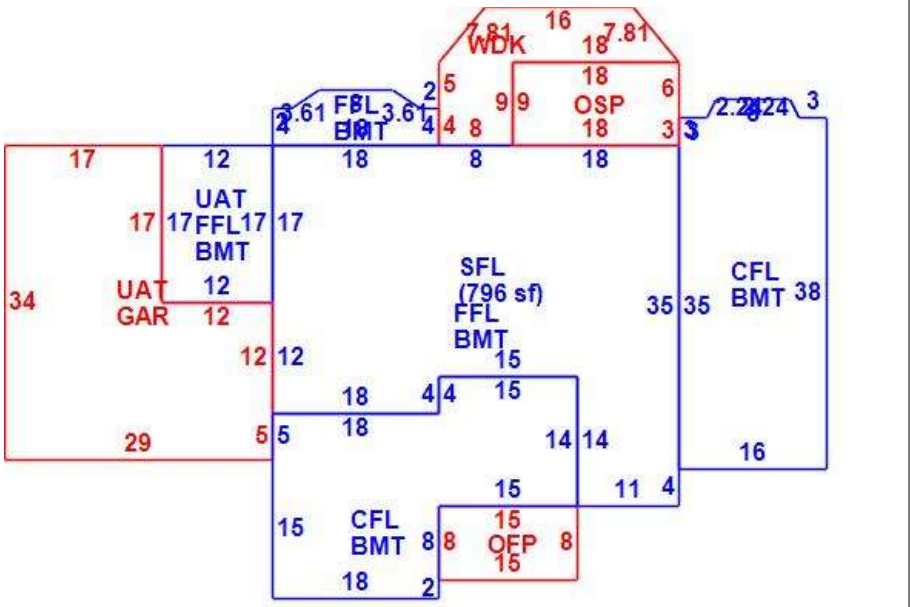

OB - OUTBUILDING & YARD ITEMS(L) / XF - BUILDING EXTRA FEATURES(B)

Code	Description	Su	Sub Type	Lan	Units	Unit Price	Yr Blt	%	Dep.	Cond	Gra	Qual	Apprais Va
02	SHED/FR			L	96	12.00	2001	70	0.00	GD	A	1.00	800

BUILDING SUB-AREA SUMMARY SECTION

Subarea	Description	Living	Gross	Eff Area	Unit Cost	Undeprec Value
BMT	BASEMENT	0	2,820		25.66	72,369
CFL	CATHEDRAL CE	1,196	1,196		132.18	158,083
FFL	1ST FLOOR	1,624	1,624		128.31	208,382
GAR	GARAGE	0	782		51.36	40,162
OFP	OPEN PORCH	0	120		12.83	1,540
OSP	SCRN PORCH	0	162		19.01	3,080
SFL	2ND FLOOR	796	796		128.31	102,138
UAT	UNFIN ATTC	0	986		25.64	25,278
WDK	WOOD DECK	0	198		25.92	5,133
	Ttl Gross Liv / Lease Area	3,616	8,684			616,165