Property Location 100 SOUTH BROOK RD | Map ID 56/ 8/ 10/ / | Bldg Name | State Use 101
Vision ID 4323 | Account # 4392 | Bldg # 1 | Sec # 1 of 1 | Card # 1 of 1 | Print Date 11/22/2024 10:00:11 A

CURRENT OWNER	TOPO TYPE	UTILITY	STREET	LOCATION
LEHMAN ANDREW P				
LEHMAN HEATHER CHAPIN	TOPO WET	EASEMENT	TRAFFIC	CORNER
100 SOUTH BROOK RD	DRAINAGE		VIEW	COMMUNITY
EAST LONGMEADOW MA 01028				

SUPPLEMENTAL DATA

Alt Prcl ID	Received
SP Permit	NIA
Chapter Land	Field 8
OC Dates	Field 9
In+Ex FY	Field 10
Mailed	Assoc Pid#

GIS ID F_387527_2840668

CURRENT ASSESSMENT

Description	Code	Appraised	Assessed
RESIDNTL.	101	706000	706,000
RES LAND	101	156100	156,100
RESIDNTL.	101	24400	24,400
Total		886,500	886,500

1006
EAST LONGMEADOW

RECORD OF OWNERSHIP

	BK-VOL/PAGE		SALE DATE	Q/U	V/I	SALE PRICE	VC
LEHMAN ANDREW P	14264	0305	06-17-2004	U	I	569,900	
FAFARD,KARIN T	09844	0429	04-30-1997	U	I	383,333	
SALMON WILIAM JACK JR +	07771	0055	08-02-1991	U	I	352,500	
WALCZAK KARL J +	07498	0259	07-11-1990	U	I	1	1B
BARIBEAU + PAPPAS	00000	0000		U		0	

PREVIOUS ASSESSMENTS (HISTORY)

Year	Code	Assessed	Year	Code	Assessed	Year	Code	Assessed
2024	101	653,500	2023	101	608,200	2022	101	550,800
	101	156,100		101	142,100		101	144,500
	101	24,400		101	24,400		101	24,400
	Total	834,000		Total	774,700		Total	719,700

EXEMPTIONS

Year	Code	Description	Amount
		Total	

OTHER ASSESSMENTS

Code	Description	YEAR	Amount	Comm Int

This signature acknowledges a visit by a Data Collector or Assessor

ASSESSING NEIGHBORHOOD

Nbhd	Nbhd Name		Tracing	Batch
0001			101	NV

NOTES

SUB DIV #588,589

APPRAISED VALUE SUMMARY

Appraised BLDG. Value (Card)	706,000
Appraised Xf (B) Value (Bldg)	0
Appraised Ob (B) Value (Bldg)	24,400
Appraised Land Value (Bldg)	156,100
Special Land Value	0
Total Appraised Parcel Value	886,500
Valuation Method	C
Adjustment	
Net Total Appraised Parcel Value	886,500

BUILDING PERMIT RECORD

Permit Id	Issue Date	Type	Description	Amount	Insp Date	% Comp	Date Comp	Comments
201702141	07-21-2017	1	PORCH	15,400	02-28-2018	100	02-28-2018	FRONT ENTRY
201502620	09-23-2015	7	REMODEL	72,000	05-27-2016	100	05-27-2016	FIN BMT 1600 SF
201302761	09-30-2013	7	REMODEL	80,000	05-30-2014	100	05-30-2014	BATH & DRESSING
201202606	06-26-2012	GEN	GENERATOR	9,980				
285	09-07-2010	4	ADDITION	317,000				ADD 1175 SF. REM
101	05-14-2009	7	REMODEL	19,000				BATH NVC
57	03-06-2008	7	REMODEL	23,000				BATH RM & KITCHE

VISIT / CHANGE HISTORY

Date	Type	Is	Id	Cd	Purpose/Result
02-28-2018			333	15	PERMIT VISIT
05-27-2016			317	15	PERMIT VISIT
05-30-2014			317	14	INSPECTED
05-09-2014			317	15	PERMIT VISIT
07-20-2012			317	15	PERMIT VISIT
03-09-2012			317	15	PERMIT VISIT
01-27-2012			317	16	FIELDREV CHG

LAND LINE VALUATION SECTION

B	Use Co	Description	Zone	D	Fronta	Depth	Land Units		Unit Price	I. Fact	S.A.	Ac Di	C. Fact	St. Idx	Adj	Notes	Special Pricing				Size A	Adj Unit Pric	Land Value
1	101	ONE FAM	RAA				40,000	SF	3.12	1.250	9	LAND	1.00	NV	1.00			0			1.000	3.9	156,000
1	101	ONE FAM	RAA				0.010	AC	7,000.00	1.000	0		1.00	NV	1.00			0			1.000	7,000	100
						Total Card Land Units	0.93	AC	Parcel Total Land Area:			0.93										Total Land Value	156,100

Property Location 100 SOUTH BROOK RD | Map ID 56/ 8/ 10/ / | Bldg Name | State Use 101
Vision ID 4323 | Account # 4392 | Bldg # 1 | Sec # 1 of 1 | Card # 1 of 1 | Print Date 11/22/2024 10:00:11 A

CONSTRUCTION DETAIL

Element	Cd	Description
Style	06	COLONIAL
Model	01	RESIDENTIAL
Grade	B+	GOOD (+)
Stories	2.50	2 1/2 STORIES
Foundation	1	CONCRETE
Exterior Wall 1	8	BRICK VENR
Exterior Wall 2	4	VINYL
Roof Structure	2	HIP
Roof Cover	1	ASPHALT SH
Interior Wall 1	1	DRYWALL
Interior Wall 2		
Interior Floor 1	3	HARDWOOD
Interior Floor 2	4	CARPET
Heat Fuel	2	GAS
Heat Type	1	FORCED H/A
AC Type	03	FULL
Bedrooms	4	
Full Baths	3	
Half Baths	1	
Extra Fixtures	3	
Total Rooms	9	
Bath Style	G	GOOD
Half Bath Style	G	GOOD
Kitchens	1	
Kitchen Style	G	GOOD
Extra Kitchens	0	
Extra Kitchen St		
FBM Sqft	1600	
FBM Quality	5	
FIN ATC Sqft		
FIN ATC Quality		
Fireplaces	1	
WS Flues		

CONSTRUCTION DETAIL (CONTINUED)

Element	Cd	Description
Central Vac	1	YES
Basement Floor	12	CONCRETE
Bsmt Garage		
Units	1	

MIXED USE

Code	Description	Percentage
101	ONE FAM	100
		0
		0

COST / MARKET VALUATION

Adj Base Rate	95.77
RCN	830,551
Net Other Adj	
Year Built	1990
Effective Year Built	2006
Depreciation Code	GV
Remodel Rating	04
Year Remodeled	2010
Depreciation %	15
Functional Obsol	
External Obsol	
Cost Trend Factor	1
Condition	
% Complete	
Overall % Condition	85
RCNLD	706,000
Dep % Ovr	
Dep Ovr Comment	
Misc Imp Ovr	
Misc Imp Ovr Comment	
Cost to Cure Ovr	
Cost to Cure Ovr Comment	

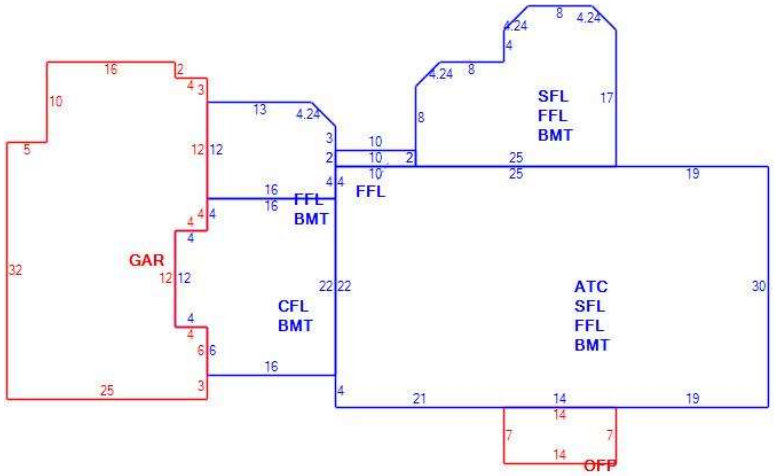

OB - OUTBUILDING & YARD ITEMS(L) / XF - BUILDING EXTRA FEATURES(B)

Code	Description	Su	Sub Type	Lan	Units	Unit Price	Yr Blt	%	Dep.	Cond	Gra	Qual	Apprais Va
11	POOL I-V	OB	Outbuildi	L	800	29.00	1999	70	0.00	GD	G	1.25	20,300
23	POOL HSE			L	160	36.80	2009	70	0.00	GD	A	1.00	4,100
GEN	GENERATO			B	1	0.00	2005	85	1.00	AV	A	1.00	0

BUILDING SUB-AREA SUMMARY SECTION

Subarea	Description	Living	Gross	Eff Area	Unit Cost	Undeprec Value
ATC	ATTIC	405	1,620		34.62	56,090
BMT	BASEMENT	0	2,618		27.72	72,571
CFL	CATHEDRAL CE	400	400		142.65	57,060
FFL	1ST FLOOR	2,238	2,238		138.49	309,950
GAR	GARAGE	0	944		55.46	52,351
OFP	OPEN PORCH	0	98		14.13	1,385
SFL	2ND FLOOR	2,030	2,030		138.49	281,144
	Ttl Gross Liv / Lease Area	5,073	9,948			830,551