Property Location 25 CRESTVIEW RD | Map ID 57/ 19/ 25/ / | Bldg Name | State Use 101
Vision ID 4335 | Account # 4404 | Bldg # 1 | Sec # 1 of 1 | Card # 1 of 1 | Print Date 11/22/2024 10:02:02

CURRENT OWNER	TOPO TYPE	UTILITY	STREET	LOCATION
FIALLO VIRIATO M + COLLEEN A V				
	TOPO WET	EASEMENT	TRAFFIC	CORNER
25 CRESTVIEW RD				
	DRAINAGE		VIEW	COMMUNITY
EAST LONGMEADOW MA 01028				

SUPPLEMENTAL DATA

Alt Prcl ID	Received
SP Permit	NIA
Chapter Land	Field 8
OC Dates	Field 9
In+Ex FY	Field 10
Mailed	Assoc Pid#

GIS ID F_387653_2840255

CURRENT ASSESSMENT

Description	Code	Appraised	Assessed
RESIDNTL.	101	476600	476,600
RES LAND	101	156100	156,100
Total		632,700	632,700

1006

EAST LONGMEADOW

RECORD OF OWNERSHIP

	BK-VOL/PAGE		SALE DATE	Q/U	V/I	SALE PRICE	VC
FIALLO VIRIATO M + COLLEEN A V	08960	0355	10-04-1994	U	I	43,000	1
VICTOR SHIBLEY HOMES INC	08549	0086	09-03-1993	U	V	72,500	
SOUTH MEADOWS INC	06343	0440	12-30-1986	U	I	1	1B
BARIBEAU ROLAND J +	00000	0000		U		0	

PREVIOUS ASSESSMENTS (HISTORY)

Year	Code	Assessed	Year	Code	Assessed	Year	Code	Assessed
2024	101	452,200	2023	101	416,300	2022	101	377,400
	101	156,100		101	142,100		101	144,500
	Total	608,300		Total	558,400		Total	521,900

EXEMPTIONS

Year	Code	Description	Amount
		Total	

OTHER ASSESSMENTS

Code	Description	YEAR	Amount	Comm Int

This signature acknowledges a visit by a Data Collector or Assessor

ASSESSING NEIGHBORHOOD

Nbhd	Nbhd Name		Tracing	Batch
0001			101	NV

NOTES

APPRAISED VALUE SUMMARY

Appraised BLDG. Value (Card)	476,600
Appraised Xf (B) Value (Bldg)	0
Appraised Ob (B) Value (Bldg)	0
Appraised Land Value (Bldg)	156,100
Special Land Value	0
Total Appraised Parcel Value	632,700
Valuation Method	C
Adjustment	
Net Total Appraised Parcel Value	632,700

BUILDING PERMIT RECORD

Permit Id	Issue Date	Type	Description	Amount	Insp Date	% Comp	Date Comp	Comments
B-23-853	12-06-2023	25	WINDOWS	8,898	06-07-2024	100	02-19-2024	2 WINDOWS
202202567	08-19-2022	25	WINDOWS	4,900		0		REPLC 2 WINDOW
201602805	11-02-2016	12	REROOF	30,000	04-05-2017	100	04-05-2017	
201203343	10-31-2012	17	DECK	41,000				REPLACE EXISTIN
69	03-30-2011	25	WINDOWS	850				NVC
55	03-18-2011	7	REMODEL	5,000				FINISH BMT
322	12-01-1994	MN	Manual Note	250,000				DWELLING

VISIT / CHANGE HISTORY

Date	Type	Is	Id	Cd	Purpose/Result
06-07-2024			450	15	PERMIT VISIT
04-05-2017			317	15	PERMIT VISIT
07-05-2013			317	15	PERMIT VISIT
02-24-2012			317	15	PERMIT VISIT
02-24-2012			317	15	PERMIT VISIT
11-07-2008			317	14	INSPECTED
10-21-2008			317	2	MEASURED

LAND LINE VALUATION SECTION

B	Use Co	Description	Zone	D	Fronta	Depth	Land Units		Unit Price	I. Fact	S.A.	Ac Di	C. Fact	St. Idx	Adj	Notes	Special Pricing				Size A	Adj Unit Pric	Land Value
1	101	ONE FAM	RAA				40,000	SF	3.12	1.250	9	LAND	1.00	NV	1.00			0			1.000	3.9	156,000
1	101	ONE FAM	RAA				0.020	AC	7,000.00	1.000	0		1.00	NV	1.00			0			1.000	7,000	100
						Total Card Land Units	0.94	AC	Parcel Total Land Area:			0.94										Total Land Value	156,100

Property Location 25 CRESTVIEW RD | Map ID 57/ 19/ 25/ / | Bldg Name | State Use 101
Vision ID 4335 | Account # 4404 | Bldg # 1 | Sec # 1 of 1 | Card # 1 of 1 | Print Date 11/22/2024 10:02:02

CONSTRUCTION DETAIL

Element	Cd	Description
Style	06	COLONIAL
Model	01	RESIDENTIAL
Grade	B	GOOD
Stories	2.00	2 STORY
Foundation	1	CONCRETE
Exterior Wall 1	2	CLAPBOARD
Exterior Wall 2		
Roof Structure	2	HIP
Roof Cover	1	ASPHALT SH
Interior Wall 1	1	DRYWALL
Interior Wall 2		
Interior Floor 1	3	HARDWOOD
Interior Floor 2	4	CARPET
Heat Fuel	2	GAS
Heat Type	1	FORCED H/A
AC Type	03	FULL
Bedrooms	4	
Full Baths	2	
Half Baths	1	
Extra Fixtures	1	
Total Rooms	8	
Bath Style	G	GOOD
Half Bath Style	V	VERY GOOD
Kitchens	1	
Kitchen Style	V	V GOOD
Extra Kitchens	0	
Extra Kitchen St	N	NONE
FBM Sqft	715	
FBM Quality	5	
FIN ATC Sqft		
FIN ATC Quality		
Fireplaces	2	
WS Flues	0	

CONSTRUCTION DETAIL (CONTINUED)

Element	Cd	Description
Central Vac	0	NO
Basement Floor	12	CONCRETE
Bsmt Garage	0	
Units	1	

MIXED USE

Code	Description	Percentage
101	ONE FAM	100
		0
		0

COST / MARKET VALUATION

Adj Base Rate	103.45
RCN	574,277
Net Other Adj	
Year Built	1995
Effective Year Built	2004
Depreciation Code	GD
Remodel Rating	
Year Remodeled	
Depreciation %	17
Functional Obsol	
External Obsol	
Cost Trend Factor	1
Condition	
% Complete	
Overall % Condition	83
RCNLD	476,600
Dep % Ovr	
Dep Ovr Comment	
Misc Imp Ovr	
Misc Imp Ovr Comment	
Cost to Cure Ovr	
Cost to Cure Ovr Comment	

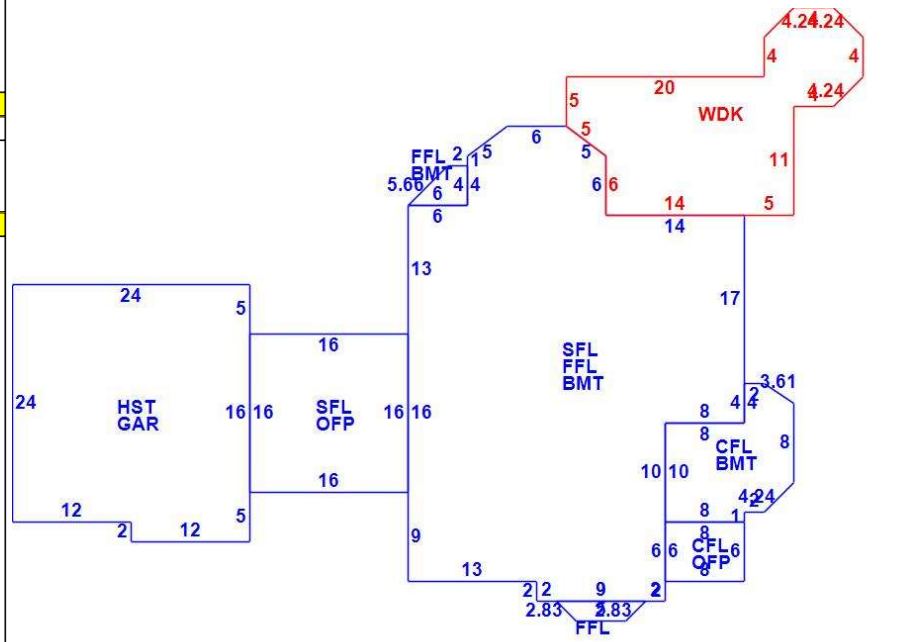

OB - OUTBUILDING & YARD ITEMS(L) / XF - BUILDING EXTRA FEATURES(B)

Code	Description	Su	Sub Type	Lan	Units	Unit Price	Yr Blt	%	Dep.	Cond	Gra	Qual	Apprais Va

BUILDING SUB-AREA SUMMARY SECTION

Subarea	Description	Living	Gross	Eff Area	Unit Cost	Undeprec Value
BMT	BASEMENT	0	1,430		29.00	41,476
CFL	CATHEDRAL CE	186	186		149.70	27,844
FFL	1ST FLOOR	1,306	1,306		145.02	189,395
GAR	GARAGE	0	600		58.01	34,805
HST	HALF STORY	300	600		72.51	43,506
OFP	OPEN PORCH	0	304		14.31	4,351
SFL	2ND FLOOR	1,532	1,532		145.02	222,170
WDK	WOOD DECK	0	370		29.00	10,731
	Ttl Gross Liv / Lease Area	3,324	6,328			574,277