Property Location 14 CRESTVIEW RD | Map ID 57/ 23/ 21/ / | Bldg Name | State Use 101
Vision ID 4340 | Account # 4409 | Bldg # 1 | Sec # 1 of 1 | Card # 1 of 1 | Print Date 11/22/2024 10:02:47

CURRENT OWNER	TOPO TYPE	UTILITY	STREET	LOCATION
SEABURY LELAND B				
BROWN DONNA M	**TOPO WET**	**EASEMENT**	**TRAFFIC**	**CORNER**
14 CRESTVIEW RD				
	DRAINAGE		**VIEW**	**COMMUNITY**
EAST LONGMEADOW MA 01028				

SUPPLEMENTAL DATA

Alt Prcl ID	Received
SP Permit HO:HO	NIA
Chapter Land	Field 8
OC Dates	Field 9
In+Ex FY	Field 10
Mailed	Assoc Pid#

GIS ID F_387320_2840015

CURRENT ASSESSMENT

Description	Code	Appraised	Assessed
RESIDNTL.	101	543200	543,200
RES LAND	101	156400	156,400
Total		699,600	699,600

1006

EAST LONGMEADOW

RECORD OF OWNERSHIP

RECORD OF OWNERSHIP	BK-VOL/PAGE		SALE DATE	Q/U	V/I	SALE PRICE	VC
SEABURY LELAND B	15090	0555	06-14-2005	U	I	100	1A
BROWN,DONNA M	11266	0524	07-14-2000	U	I	379,500	
MC CARTY,JAMES F	BK-10	0000	12-15-1997	U	I	350,000	
BOUSQUET PAUL A +,	09682	0578	11-13-1996	U	V	70,000	
COYNE TIMOTHY J +	08901	0237	07-29-1994	U	V	66,500	

PREVIOUS ASSESSMENTS (HISTORY)

Year	Code	Assessed	Year	Code	Assessed	Year	Code	Assessed
2024	101	501,900	2023	101	460,500	2022	101	419,100
	101	156,400		101	142,400		101	144,800
	Total	658,300		Total	602,900		Total	563,900

EXEMPTIONS

Year	Code	Description	Amount
		Total	

OTHER ASSESSMENTS

Code	Description	YEAR	Amount	Comm Int

This signature acknowledges a visit by a Data Collector or Assessor

ASSESSING NEIGHBORHOOD

Nbhd	Nbhd Name		Tracing	Batch
0001			101	NV

NOTES

SUB DIV #588,589

APPRAISED VALUE SUMMARY

Appraised BLDG. Value (Card)	543,200
Appraised Xf (B) Value (Bldg)	0
Appraised Ob (B) Value (Bldg)	0
Appraised Land Value (Bldg)	156,400
Special Land Value	0
Total Appraised Parcel Value	699,600
Valuation Method	C
Adjustment	
Net Total Appraised Parcel Value	699,600

BUILDING PERMIT RECORD

Permit Id	Issue Date	Type	Description	Amount	Insp Date	% Comp	Date Comp	Comments
234	08-11-2004	4	ADDITION	40,000				14` X 24`
290	11-18-1996	2	DWELLING	210,000				DWELLING

VISIT / CHANGE HISTORY

Date	Type	Is	Id	Cd	Purpose/Result
04-17-2018			333	3	MEAS+INSPCTD
02-19-2009			250	P1	PHONE MESSAG
10-24-2008			317	2	MEASURED
01-10-2005			311	15	PERMIT VISIT
07-24-1998			232	3	MEAS+INSPCTD
01-20-1998			200	14	INSPECTED
02-10-1997			105	15	PERMIT VISIT

LAND LINE VALUATION SECTION

B	Use Co	Description	Zone	D	Fronta	Depth	Land Units		Unit Price	I. Fact	S.A.	Ac Di	C. Fact	St. Idx	Adj	Notes	Special Pricing				Size A	Adj Unit Pric	Land Value
1	101	ONE FAM	RAA				40,000	SF	3.12	1.250	9	LAND	1.00	NV	1.00			0			1.000	3.9	156,000
1	101	ONE FAM	RAA				0.050	AC	7,000.00	1.000	0		1.00	NV	1.00			0			1.000	7,000	400
						Total Card Land Units	0.97	AC	Parcel Total Land Area:			0.97										Total Land Value	156,400

Property Location 14 CRESTVIEW RD | Map ID 57/ 23/ 21/ / | Bldg Name | State Use 101
Vision ID 4340 | Account # 4409 | Bldg # 1 | Sec # 1 of 1 | Card # 1 of 1 | Print Date 11/22/2024 10:02:48

CONSTRUCTION DETAIL

Element	Cd	Description
Style	06	COLONIAL
Model	01	RESIDENTIAL
Grade	B	GOOD
Stories	2.00	2 STORY
Foundation	1	CONCRETE
Exterior Wall 1	4	VINYL
Exterior Wall 2		
Roof Structure	1	GABLE
Roof Cover	1	ASPHALT SH
Interior Wall 1	1	DRYWALL
Interior Wall 2		
Interior Floor 1	3	HARDWOOD
Interior Floor 2	4	CARPET
Heat Fuel	2	GAS
Heat Type	1	FORCED H/A
AC Type	03	FULL
Bedrooms	5	
Full Baths	3	
Half Baths	1	
Extra Fixtures	3	
Total Rooms	13	
Bath Style	G	GOOD
Half Bath Style	G	GOOD
Kitchens	1	
Kitchen Style	G	GOOD
Extra Kitchens	0	
Extra Kitchen St		
FBM Sqft		
FBM Quality		
FIN ATC Sqft		
FIN ATC Quality		
Fireplaces	1	
WS Flues	1	

CONSTRUCTION DETAIL (CONTINUED)

Element	Cd	Description
Central Vac	0	NO
Basement Floor	12	CONCRETE
Bsmt Garage		
Units	1	

MIXED USE

Code	Description	Percentage
101	ONE FAM	100
		0
		0

COST / MARKET VALUATION

Adj Base Rate	99.20
RCN	639,104
Net Other Adj	
Year Built	1996
Effective Year Built	2006
Depreciation Code	GD
Remodel Rating	
Year Remodeled	
Depreciation %	15
Functional Obsol	
External Obsol	
Cost Trend Factor	1
Condition	
% Complete	
Overall % Condition	85
RCNLD	543,200
Dep % Ovr	
Dep Ovr Comment	
Misc Imp Ovr	
Misc Imp Ovr Comment	
Cost to Cure Ovr	
Cost to Cure Ovr Comment	

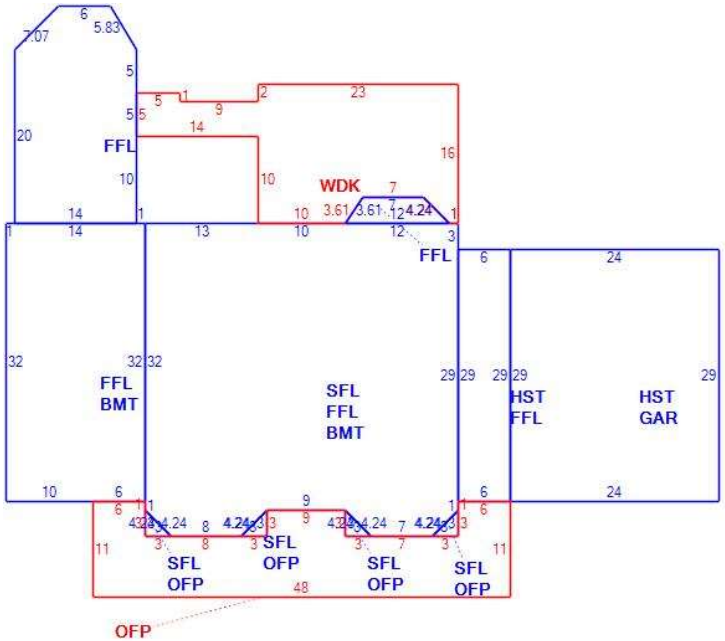

OB - OUTBUILDING & YARD ITEMS(L) / XF - BUILDING EXTRA FEATURES(B)

Code	Description	Su	Sub Type	Lan	Units	Unit Price	Yr Blt	%	Dep.	Cond	Gra	Qual	Apprais Va

BUILDING SUB-AREA SUMMARY SECTION

Subarea	Description	Living	Gross	Eff Area	Unit Cost	Undeprec Value
BMT	BASEMENT	0	1,763		26.91	47,436
FFL	1ST FLOOR	2,296	2,296		134.38	308,533
GAR	GARAGE	0	696		53.67	37,357
HST	HALF STORY	435	870		67.19	58,455
OFP	OPEN PORCH	0	431		13.41	5,778
SFL	2ND FLOOR	1,271	1,271		134.38	170,795
WDK	WOOD DECK	0	401		26.81	10,750
	Ttl Gross Liv / Lease Area	4,002	7,728			639,104