Property Location 104 STONEHILL RD | Map ID 64/ 17/ 6E/ / | Bldg Name | State Use 101
Vision ID 4871 | Account # 4946 | Bldg # 1 | Sec # 1 of 1 | Card # 1 of 1 | Print Date 11/22/2024 11:26:26 A

CURRENT OWNER	TOPO TYPE	UTILITY	STREET	LOCATION
CALCASOLA CHRISTOPHER + HEAT				
	TOPO WET	EASEMENT	TRAFFIC	CORNER
104 STONEHILL RD				
	DRAINAGE		VIEW	COMMUNITY
EAST LONGMEADOW MA 01028				

GIS ID F_389900_2848300

SUPPLEMENTAL DATA

Alt Prcl ID	Received
SP Permit	NIA
Chapter Land	Field 8
OC Dates	Field 9
In+Ex FY	Field 10
Mailed	Assoc Pid#

CURRENT ASSESSMENT

Description	Code	Appraised	Assessed
RESIDNTL.	101	460200	460,200
RES LAND	101	157700	157,700
RESIDNTL.	101	1000	1,000
Total		618,900	618,900

1006
EAST LONGMEADOW

RECORD OF OWNERSHIP

	BK-VOL/PAGE		SALE DATE	Q/U	V/I	SALE PRICE	VC
CALCASOLA CHRISTOPHER + HEATHER L	20522	0002	12-03-2014	Q	I	435,000	00
HULTON CHARLES E	14509	0321	09-22-2004	U	I	460,000	
WADE,PHILLIP A	11529	0385	03-02-2001	U	I	326,500	
GIBSON DON E N,	09844	0382	04-30-1997	U	I	285,500	
MUELLER WILLIAM T +	06681	0506	11-12-1987	U	I	78,000	

PREVIOUS ASSESSMENTS (HISTORY)

Year	Code	Assessed	Year	Code	Assessed	Year	Code	Assessed
2024	101	427,100	2023	101	398,700	2022	101	340,100
	101	157,700		101	143,700		101	146,100
	101	1,000		101	600		101	600
	Total	585,800		Total	543,000		Total	486,800

EXEMPTIONS

Year	Code	Description	Amount
		Total	

OTHER ASSESSMENTS

Code	Description	YEAR	Amount	Comm Int

This signature acknowledges a visit by a Data Collector or Assessor

ASSESSING NEIGHBORHOOD

Nbhd	Nbhd Name		Tracing	Batch
0001			101	NV

NOTES

PLAN BK 303 PG 32

APPRAISED VALUE SUMMARY

Appraised BLDG. Value (Card)	460,200
Appraised Xf (B) Value (Bldg)	0
Appraised Ob (B) Value (Bldg)	1,000
Appraised Land Value (Bldg)	157,700
Special Land Value	0
Total Appraised Parcel Value	618,900
Valuation Method	C
Adjustment	
Net Total Appraised Parcel Value	618,900

BUILDING PERMIT RECORD

Permit Id	Issue Date	Type	Description	Amount	Insp Date	% Comp	Date Comp	Comments
B-23-460	06-22-2023	21	SIDING	55,000	06-07-2024	100		SIDING-9 WINS & D
202102550	08-10-2021	9	ALTERATION	49,500	06-21-2022	100	06-21-2022	KITCHEN, + PANTR
202002955	11-10-2020	91	INSULATION	2,247		0		
201600878	03-21-2016	62	SOLAR	14,872	05-04-2017	100	05-04-2017	
10	01-01-1988	MN	Manual Note	160,000				SFR

VISIT / CHANGE HISTORY

Date	Type	Is	Id	Cd	Purpose/Result
06-07-2024			334	15	PERMIT VISIT
06-21-2022			334	15	PERMIT VISIT
05-04-2017			317	15	PERMIT VISIT
01-27-2012			317	16	FIELDREV CHG
05-31-2007			311	3	MEAS+INSPCTD
07-23-1998			232	3	MEAS+INSPCTD
08-03-1992			131	14	INSPECTED

LAND LINE VALUATION SECTION

B	Use Co	Description	Zone	D	Fronta	Depth	Land Units		Unit Price	I. Fact	S.A.	Ac Di	C. Fact	St. Idx	Adj	Notes	Special Pricing				Size A	Adj Unit Pric	Land Value
1	101	ONE FAM	RAA				40,000	SF	3.12	1.250	9	LAND	1.00	NV	1.00			0			1.000	3.9	156,000
1	101	ONE FAM	RAA				0.240	AC	7,000.00	1.000	0		1.00	NV	1.00			0			1.000	7,000	1,700
						Total Card Land Units	1.16	AC	Parcel Total Land Area:			1.16										Total Land Value	157,700

Property Location 104 STONEHILL RD | Map ID 64/ 17/ 6E/ / | Bldg Name | State Use 101
Vision ID 4871 | Account # 4946 | Bldg # 1 | Sec # 1 of 1 | Card # 1 of 1 | Print Date 11/22/2024 11:26:26 A

CONSTRUCTION DETAIL

Element	Cd	Description
Style	06	COLONIAL
Model	01	RESIDENTIAL
Grade	B-	GOOD (-)
Stories	1.75	1 3/4 STORIES
Foundation	1	CONCRETE
Exterior Wall 1	6	STUCCO
Exterior Wall 2	8	BRICK VENR
Roof Structure	2	HIP
Roof Cover	1	ASPHALT SH
Interior Wall 1	1	DRYWALL
Interior Wall 2		
Interior Floor 1	4	CARPET
Interior Floor 2	3	HARDWOOD
Heat Fuel	2	GAS
Heat Type	1	FORCED H/A
AC Type	03	FULL
Bedrooms	3	
Full Baths	3	
Half Baths	2	
Extra Fixtures	2	
Total Rooms	9	
Bath Style	G	GOOD
Half Bath Style	G	GOOD
Kitchens	1	
Kitchen Style	G	GOOD
Extra Kitchens	0	
Extra Kitchen St	N	NONE
FBM Sqft	1256	
FBM Quality	3	
FIN ATC Sqft		
FIN ATC Quality		
Fireplaces	2	
WS Flues	0	

CONSTRUCTION DETAIL (CONTINUED)

Element	Cd	Description
Central Vac	1	YES
Basement Floor	12	CONCRETE
Bsmt Garage	0	
Units	1	

MIXED USE

Code	Description	Percentage
101	ONE FAM	100
		0
		0

COST / MARKET VALUATION

Adj Base Rate	111.10
RCN	547,858
Net Other Adj	
Year Built	1988
Effective Year Built	2005
Depreciation Code	GV
Remodel Rating	03
Year Remodeled	2022
Depreciation %	16
Functional Obsol	
External Obsol	
Cost Trend Factor	1
Condition	
% Complete	
Overall % Condition	84
RCNLD	460,200
Dep % Ovr	
Dep Ovr Comment	
Misc Imp Ovr	
Misc Imp Ovr Comment	
Cost to Cure Ovr	
Cost to Cure Ovr Comment	

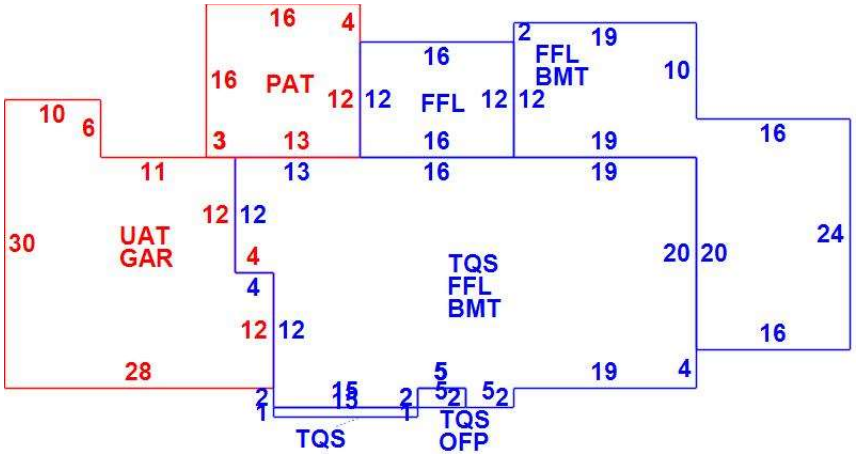

OB - OUTBUILDING & YARD ITEMS(L) / XF - BUILDING EXTRA FEATURES(B)

Code	Description	Su	Sub Type	Lan	Units	Unit Price	Yr Blt	%	Dep.	Cond	Gra	Qual	Apprais Va
02	SHED/FR			L	96	12.00	2006	70	0.00	GD	G	1.25	1,000
SOL	Solar Panels	EX	Extra Fea	B	1	0.00	2000	84	1.00			0.00	0

BUILDING SUB-AREA SUMMARY SECTION

Subarea	Description	Living	Gross	Eff Area	Unit Cost	Undeprec Value
BMT	BASEMENT	0	1,794		30.06	53,930
FFL	1ST FLOOR	1,986	1,986		150.22	298,340
GAR	GARAGE	0	684		60.18	41,161
OFP	OPEN PORCH	0	10		15.02	150
PAT	PATIO	0	256		7.63	1,953
TQS	3/4 STORY	877	1,169		112.70	131,744
UAT	UNFIN ATTC	0	684		30.09	20,580
	Ttl Gross Liv / Lease Area	2,863	6,583			547,858