Property Location 134 COUNTRY CLUB DR | Map ID 69/ 4/ 47A/ / | Bldg Name | State Use 101
Vision ID 5001 | Account # 5078 | Bldg # 1 | Sec # 1 of 1 | Card # 1 of 1 | Print Date 11/22/2024 11:46:02 A

CURRENT OWNER	TOPO TYPE	UTILITY	STREET	LOCATION
COTE PETER M TR				
COTE FLAVIA H TR	TOPO WET	EASEMENT	TRAFFIC	CORNER
134 COUNTRY CLUB DR	DRAINAGE		VIEW	COMMUNITY
EAST LONGMEADOW MA 01028				

GIS ID F_389522_2839611

SUPPLEMENTAL DATA

Alt Prcl ID	Received
SP Permit	NIA
Chapter Land	Field 8
OC Dates	Field 9
In+Ex FY	Field 10
Mailed	Assoc Pid#

CURRENT ASSESSMENT

Description	Code	Appraised	Assessed
RESIDNTL.	101	1037900	1,037,900
RES LAND	101	159600	159,600
RESIDNTL.	101	22700	22,700
Total		1,220,200	1,220,200

1006

EAST LONGMEADOW

RECORD OF OWNERSHIP

	BK-VOL/PAGE		SALE DATE	Q/U	V/I	SALE PRICE	VC
COTE PETER M TR	24107	0133	09-08-2021	U	I	1	1A
COTE PETER M	23665	0353	01-22-2021	U	I	1	1A
COTE PETER M TR	22695	0153	06-04-2019	U	I	1	1A
COTE PETER	22220	0362	06-15-2018	Q	I	900,000	00
DAGGETT TIMOTHY P	12535	0445	08-30-2002	U	I	830,000	

PREVIOUS ASSESSMENTS (HISTORY)

Year	Code	Assessed	Year	Code	Assessed	Year	Code	Assessed
2024	101	960,400	2023	101	900,100	2022	101	807,200
	101	159,600		101	145,600		101	148,000
	101	22,700		101	22,700		101	22,700
	Total	1,142,700		Total	1,068,400		Total	977,900

EXEMPTIONS

Year	Code	Description	Amount
		Total	

OTHER ASSESSMENTS

Code	Description	YEAR	Amount	Comm Int

This signature acknowledges a visit by a Data Collector or Assessor

ASSESSING NEIGHBORHOOD

Nbhd	Nbhd Name		Tracing	Batch
0001			101	NV

NOTES

SUB DIV #588,589,762

APPRAISED VALUE SUMMARY

Appraised BLDG. Value (Card)	1,037,900
Appraised Xf (B) Value (Bldg)	0
Appraised Ob (B) Value (Bldg)	22,700
Appraised Land Value (Bldg)	159,600
Special Land Value	0
Total Appraised Parcel Value	1,220,200
Valuation Method	C
Adjustment	
Net Total Appraised Parcel Value	1,220,200

BUILDING PERMIT RECORD

Permit Id	Issue Date	Type	Description	Amount	Insp Date	% Comp	Date Comp	Comments
201900488	02-12-2019	91	INSULATION	3,500		0		
201203573	12-12-2012	GEN	GENERATOR	3,000				
300	09-01-2006	7	REMODEL	25,000				OC 3/14/2007 FIN
253	09-06-2002	11	POOL	54,546				
327	12-01-1994	MN	Manual Note	350,000				DWELLING

VISIT / CHANGE HISTORY

Date	Type	Is	Id	Cd	Purpose/Result
07-10-2019			334	2	MEASURED
06-07-2013			317	15	PERMIT VISIT
04-26-2007			311	14	INSPECTED
03-02-2007			311	2	MEASURED
03-02-2007			311	15	PERMIT VISIT
12-22-2005			311	3	MEAS+INSPCTD
02-13-2003			274	15	PERMIT VISIT

LAND LINE VALUATION SECTION

B	Use Co	Description	Zone	D	Fronta	Depth	Land Units		Unit Price	I. Fact	S.A.	Ac Di	C. Fact	St. Idx	Adj	Notes	Special Pricing				Size A	Adj Unit Pric	Land Value
1	101	ONE FAM	RA				40,000	SF	3.12	1.250	9	LAND	1.00	NV	1.00			0			1.000	3.9	156,000
1	101	ONE FAM	RA				0.510	AC	7,000.00	1.000	0		1.00	NV	1.00			0			1.000	7,000	3,600
						Total Card Land Units	1.43	AC	Parcel Total Land Area:	1.43												Total Land Value	159,600

Property Location 134 COUNTRY CLUB DR | Map ID 69/ 4/ 47A/ / | Bldg Name | State Use 101
Vision ID 5001 | Account # 5078 | Bldg # 1 | Sec # 1 of 1 | Card # 1 of 1 | Print Date 11/22/2024 11:46:03 A

CONSTRUCTION DETAIL

Element	Cd	Description
Style	06	COLONIAL
Model	01	RESIDENTIAL
Grade	A	VERY GOOD
Stories	2.00	2 STORY
Foundation	1	CONCRETE
Exterior Wall 1	8	BRICK VENR
Exterior Wall 2		
Roof Structure	1	GABLE
Roof Cover	1	ASPHALT SH
Interior Wall 1	1	DRYWALL
Interior Wall 2		
Interior Floor 1	3	HARDWOOD
Interior Floor 2	4	CARPET
Heat Fuel	2	GAS
Heat Type	1	FORCED H/A
AC Type	03	FULL
Bedrooms	4	
Full Baths	4	
Half Baths	1	
Extra Fixtures	4	
Total Rooms	12	
Bath Style	G	GOOD
Half Bath Style	G	GOOD
Kitchens	1	
Kitchen Style	G	GOOD
Extra Kitchens	0	
Extra Kitchen St		
FBM Sqft	1702	
FBM Quality	5	
FIN ATC Sqft		
FIN ATC Quality		
Fireplaces	3	
WS Flues		

CONSTRUCTION DETAIL (CONTINUED)

Element	Cd	Description
Central Vac	1	YES
Basement Floor	12	CONCRETE
Bsmt Garage		
Units	1	

MIXED USE

Code	Description	Percentage
101	ONE FAM	100
		0
		0

COST / MARKET VALUATION

Adj Base Rate	93.37
RCN	1,250,541
Net Other Adj	
Year Built	1994
Effective Year Built	2004
Depreciation Code	GD
Remodel Rating	
Year Remodeled	
Depreciation %	17
Functional Obsol	
External Obsol	
Cost Trend Factor	1
Condition	
% Complete	
Overall % Condition	83
RCNLD	1,037,900
Dep % Ovr	
Dep Ovr Comment	
Misc Imp Ovr	
Misc Imp Ovr Comment	
Cost to Cure Ovr	
Cost to Cure Ovr Comment	

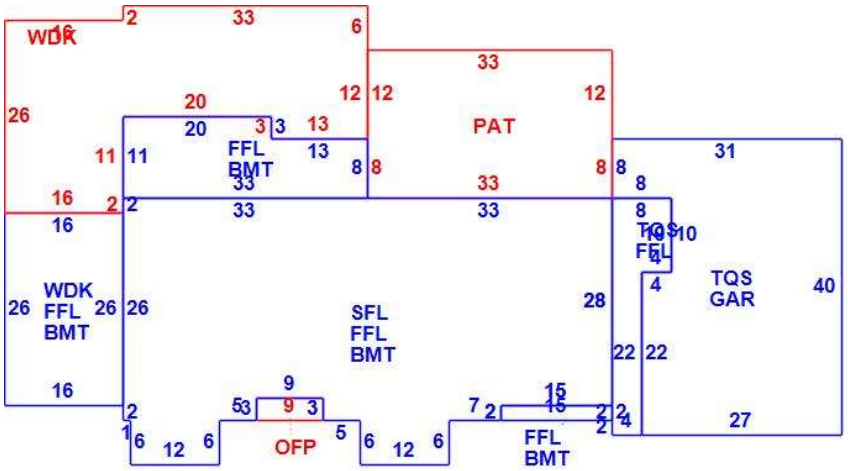

OB - OUTBUILDING & YARD ITEMS(L) / XF - BUILDING EXTRA FEATURES(B)

Code	Description	Su	Sub Type	Lan	Units	Unit Price	Yr Blt	%	Dep.	Cond	Gra	Qual	Apprais Va
12	POOL I-G			L	648	40.00	2002	70	0.00	GD	G	1.25	22,700
GEN	GENERATO			B	1	0.00	2004	83	1.00	AV	A	1.00	0

BUILDING SUB-AREA SUMMARY SECTION

Subarea	Description	Living	Gross	Eff Area	Unit Cost	Undeprec Value
BMT	BASEMENT	0	2,837		34.20	97,038
FFL	1ST FLOOR	3,005	3,005		171.14	514,284
GAR	GARAGE	0	1,072		68.49	73,420
OFP	OPEN PORCH	0	27		19.02	513
PAT	PATIO	0	660		8.56	5,648
SFL	2ND FLOOR	2,067	2,067		171.14	353,752
TQS	3/4 STORY	930	1,240		128.36	159,163
WDK	WOOD DECK	0	1,366		34.20	46,722
	Ttl Gross Liv / Lease Area	6,002	12,274			1,250,541