Property Location 153 MILLBROOK DR | Map ID 88/ 38/ 49/ / | Bldg Name | State Use 101
Vision ID 5912 | Account # 5994 | Bldg # 1 | Sec # 1 of 1 | Card # 1 of 1 | Print Date 11/22/2024 3:18:23 P

CURRENT OWNER	TOPO TYPE	UTILITY	STREET	LOCATION
BURKE JOHN F JR				
BURKE O BRIEN JOANNE	TOPO WET	EASEMENT	TRAFFIC	CORNER
153 MILLBROOK DR	DRAINAGE		VIEW	COMMUNITY
EAST LONGMEADOW MA 01028				

GIS ID F_393046_2851097

SUPPLEMENTAL DATA

Alt Prcl ID	Received
SP Permit	NIA
Chapter Land	Field 8
OC Dates	Field 9
In+Ex FY	Field 10
Mailed	Assoc Pid#

CURRENT ASSESSMENT

Description	Code	Appraised	Assessed
RESIDNTL.	101	377800	377,800
RES LAND	101	160000	160,000
Total		537,800	537,800

1006
EAST LONGMEADOW

RECORD OF OWNERSHIP

	BK-VOL/PAGE		SALE DATE	Q/U	V/I	SALE PRICE	VC
BURKE JOHN F JR	24512	LC	12-15-1989	U	I	279,500	
DUTIL A INC	00000	0000		U		0	

PREVIOUS ASSESSMENTS (HISTORY)

Year	Code	Assessed	Year	Code	Assessed	Year	Code	Assessed
2024	101	353,800	2023	101	325,100	2022	101	295,500
	101	160,000		101	146,000		101	148,400
	Total	513,800		Total	471,100		Total	443,900

EXEMPTIONS

Year	Code	Description	Amount
		Total	

OTHER ASSESSMENTS

Code	Description	YEAR	Amount	Comm Int

This signature acknowledges a visit by a Data Collector or Assessor

APPRAISED VALUE SUMMARY

Appraised BLDG. Value (Card)	377,800
Appraised Xf (B) Value (Bldg)	0
Appraised Ob (B) Value (Bldg)	0
Appraised Land Value (Bldg)	160,000
Special Land Value	0
Total Appraised Parcel Value	537,800
Valuation Method	C
Adjustment	
Net Total Appraised Parcel Value	537,800

ASSESSING NEIGHBORHOOD

Nbhd	Nbhd Name		Tracing	Batch
0001			101	NV

NOTES

SUB DIV #545

BUILDING PERMIT RECORD

Permit Id	Issue Date	Type	Description	Amount	Insp Date	% Comp	Date Comp	Comments
185	08-14-1997	MN	Manual Note	15,600				ADDITION
234	09-01-1989	MN	Manual Note	195,000				DWLG

VISIT / CHANGE HISTORY

Date	Type	Is	Id	Cd	Purpose/Result
05-04-2018			333	2	MEASURED
07-15-2005			274	3	MEAS+INSPCTD
01-03-2000			250	22	MAILER SENT
12-01-1999			247	2	MEASURED
01-14-1998			200	2	MEASURED
04-01-1992			170	3	MEAS+INSPCTD
01-22-1990			105	15	PERMIT VISIT

LAND LINE VALUATION SECTION

B	Use Co	Description	Zone	D	Fronta	Depth	Land Units		Unit Price	I. Fact	S.A.	Ac Di	C. Fact	St. Idx	Adj	Notes	Special Pricing				Size A	Adj Unit Pric	Land Value
1	101	ONE FAM	RA				40,000	SF	3.12	1.250	9	LAND	1.00	NV	1.00			0			1.000	3.9	156,000
1	101	ONE FAM	RA				0.570	AC	7,000.00	1.000	0		1.00	NV	1.00			0			1.000	7,000	4,000
						Total Card Land Units	1.49	AC	Parcel Total Land Area:	1.49												Total Land Value	160,000

Property Location 153 MILLBROOK DR | Map ID 88/ 38/ 49/ / | Bldg Name | State Use 101
Vision ID 5912 | Account # 5994 | Bldg # 1 | Sec # 1 of 1 | Card # 1 of 1 | Print Date 11/22/2024 3:18:23 P

CONSTRUCTION DETAIL

Element	Cd	Description
Style	06	COLONIAL
Model	01	RESIDENTIAL
Grade	C+	AVG. (+)
Stories	2.00	2 STORY
Foundation	1	CONCRETE
Exterior Wall 1	2	CLAPBOARD
Exterior Wall 2	3	ALUMINUM
Roof Structure	1	GABLE
Roof Cover	1	ASPHALT SH
Interior Wall 1	1	DRYWALL
Interior Wall 2		
Interior Floor 1	4	CARPET
Interior Floor 2	3	HARDWOOD
Heat Fuel	2	GAS
Heat Type	1	FORCED H/A
AC Type	03	FULL
Bedrooms	4	
Full Baths	3	
Half Baths	1	
Extra Fixtures	0	
Total Rooms	8	
Bath Style	G	GOOD
Half Bath Style	G	GOOD
Kitchens	1	
Kitchen Style	G	GOOD
Extra Kitchens	0	
Extra Kitchen St		
FBM Sqft	402	
FBM Quality	1	
FIN ATC Sqft		
FIN ATC Quality		
Fireplaces	1	
WS Flues		

CONSTRUCTION DETAIL (CONTINUED)

Element	Cd	Description
Central Vac	1	YES
Basement Floor	12	CONCRETE
Bsmt Garage		
Units	1	

MIXED USE

Code	Description	Percentage
101	ONE FAM	100
		0
		0

COST / MARKET VALUATION

Adj Base Rate	120.16
RCN	472,261
Net Other Adj	
Year Built	1989
Effective Year Built	2001
Depreciation Code	GD
Remodel Rating	
Year Remodeled	
Depreciation %	20
Functional Obsol	
External Obsol	
Cost Trend Factor	1
Condition	
% Complete	
Overall % Condition	80
RCNLD	377,800
Dep % Ovr	
Dep Ovr Comment	
Misc Imp Ovr	
Misc Imp Ovr Comment	
Cost to Cure Ovr	
Cost to Cure Ovr Comment	

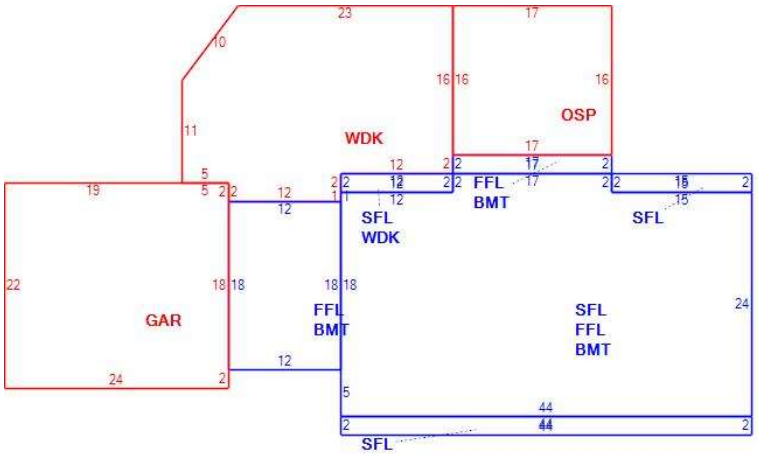

OB - OUTBUILDING & YARD ITEMS(L) / XF - BUILDING EXTRA FEATURES(B)

Code	Description	Su	Sub Type	Lan	Units	Unit Price	Yr Blt	%	Dep.	Cond	Gra	Qual	Apprais Va

BUILDING SUB-AREA SUMMARY SECTION

Subarea	Description	Living	Gross	Eff Area	Unit Cost	Undeprec Value
BMT	BASEMENT	0	1,340		29.47	39,490
FFL	1ST FLOOR	1,340	1,340		147.35	197,451
GAR	GARAGE	0	528		58.88	31,091
OSP	SCRN PORCH	0	272		22.21	6,041
SFL	2ND FLOOR	1,232	1,232		147.35	181,537
WDK	WOOD DECK	0	563		29.57	16,651
	Ttl Gross Liv / Lease Area	2,572	5,275			472,261