Property Location 31 OXFORD LN | Map ID 89/ 33/ 8A/ / | Bldg Name | State Use 101
Vision ID 5949 | Account # 6031 | Bldg # 1 | Sec # 1 of 1 | Card # 1 of 1 | Print Date 11/22/2024 3:24:01 P

CURRENT OWNER	TOPO TYPE	UTILITY	STREET	LOCATION
FERRENTINO JOSEPH				
FERRENTINO GIOVANNA L	TOPO WET	EASEMENT	TRAFFIC	CORNER
31 OXFORD LN	DRAINAGE		VIEW	COMMUNITY
EAST LONGMEADOW MA 01028				

GIS ID F_392754_2848657

SUPPLEMENTAL DATA

Alt Prcl ID	Received
SP Permit	NIA
Chapter Land	Field 8
OC Dates	Field 9
In+Ex FY	Field 10
Mailed	Assoc Pid#

CURRENT ASSESSMENT

Description	Code	Appraised	Assessed
RESIDNTL.	101	497800	497,800
RES LAND	101	157200	157,200
	Total	655,000	655,000

1006

EAST LONGMEADOW

RECORD OF OWNERSHIP

	BK-VOL/PAGE		SALE DATE	Q/U	V/I	SALE PRICE	VC
FERRENTINO JOSEPH	09491	0460	05-17-1996	U	I	300,000	1S
THE BANK OF WESTERN MASS	09297	0189	11-02-1995	U	V	280,000	1L
GASPERINI MICHAEL J +	07451	0232	05-11-1990	U	I	1	1A
FERRRIS CYNTHIA M	07382	0042	02-02-1990	U	I	270,000	1
GASPERINI MICHAEL	07382	0042	02-02-1990	U	I	1	1F

PREVIOUS ASSESSMENTS (HISTORY)

Year	Code	Assessed	Year	Code	Assessed	Year	Code	Assessed
2024	101	459,800	2023	101	426,900	2022	101	382,700
	101	157,200		101	143,200		101	145,600
	Total	617,000		Total	570,100		Total	528,300

EXEMPTIONS

Year	Code	Description	Amount
		Total	

OTHER ASSESSMENTS

Code	Description	YEAR	Amount	Comm Int

This signature acknowledges a visit by a Data Collector or Assessor

APPRAISED VALUE SUMMARY

Appraised BLDG. Value (Card)	497,800
Appraised Xf (B) Value (Bldg)	0
Appraised Ob (B) Value (Bldg)	0
Appraised Land Value (Bldg)	157,200
Special Land Value	0
Total Appraised Parcel Value	655,000
Valuation Method	C
Adjustment	
Net Total Appraised Parcel Value	655,000

ASSESSING NEIGHBORHOOD

Nbhd	Nbhd Name		Tracing	Batch
0001			101	NV

NOTES

SUB DIV # 575 90 SALE INCLS 89-50-20

89-52-18SUB DIV #654

BUILDING PERMIT RECORD

Permit Id	Issue Date	Type	Description	Amount	Insp Date	% Comp	Date Comp	Comments
41	03-01-1990	MN	Manual Note	135,000				RESIDENCE

VISIT / CHANGE HISTORY

Date	Type	Is	Id	Cd	Purpose/Result
06-26-2018			333	2	MEASURED
07-15-2005			274	3	MEAS+INSPCTD
01-03-2000			250	22	MAILER SENT
11-30-1999			247	2	MEASURED
08-06-1992			131	14	INSPECTED
01-16-1991			105	3	MEAS+INSPCTD

LAND LINE VALUATION SECTION

B	Use Co	Description	Zone	D	Fronta	Depth	Land Units		Unit Price	I. Fact	S.A.	Ac Di	C. Fact	St. Idx	Adj	Notes	Special Pricing				Size A	Adj Unit Pric	Land Value
1	101	ONE FAM	RA				40,000	SF	3.12	1.250	9	LAND	1.00	NV	1.00			0			1.000	3.9	156,000
1	101	ONE FAM	RA				0.170	AC	7,000.00	1.000	0		1.00	NV	1.00			0			1.000	7,000	1,200
						Total Card Land Units	1.09	AC	Parcel Total Land Area:	1.09												Total Land Value	157,200

Property Location 31 OXFORD LN | Map ID 89/ 33/ 8A/ / | Bldg Name | State Use 101
Vision ID 5949 | Account # 6031 | Bldg # 1 | Sec # 1 of 1 | Card # 1 of 1 | Print Date 11/22/2024 3:24:01 P

CONSTRUCTION DETAIL

Element	Cd	Description
Style	06	COLONIAL
Model	01	RESIDENTIAL
Grade	B	GOOD
Stories	2.00	2 STORY
Foundation	1	CONCRETE
Exterior Wall 1	8	BRICK VENR
Exterior Wall 2	2	CLAPBOARD
Roof Structure	2	HIP
Roof Cover	1	ASPHALT SH
Interior Wall 1	2	PLASTER
Interior Wall 2		
Interior Floor 1	3	HARDWOOD
Interior Floor 2	4	CARPET
Heat Fuel	2	GAS
Heat Type	1	FORCED H/A
AC Type	03	FULL
Bedrooms	4	
Full Baths	2	
Half Baths	2	
Extra Fixtures	3	
Total Rooms	10	
Bath Style	G	GOOD
Half Bath Style	G	GOOD
Kitchens	1	
Kitchen Style	G	GOOD
Extra Kitchens	0	
Extra Kitchen St		
FBM Sqft		
FBM Quality		
FIN ATC Sqft		
FIN ATC Quality		
Fireplaces	1	
WS Flues		

CONSTRUCTION DETAIL (CONTINUED)

Element	Cd	Description
Central Vac	1	YES
Basement Floor	12	CONCRETE
Bsmt Garage		
Units	1	

MIXED USE

Code	Description	Percentage
101	ONE FAM	100
		0
		0

COST / MARKET VALUATION

Adj Base Rate	99.97
RCN	614,566
Net Other Adj	
Year Built	1990
Effective Year Built	2002
Depreciation Code	GD
Remodel Rating	
Year Remodeled	
Depreciation %	19
Functional Obsol	
External Obsol	
Cost Trend Factor	1
Condition	
% Complete	
Overall % Condition	81
RCNLD	497,800
Dep % Ovr	
Dep Ovr Comment	
Misc Imp Ovr	
Misc Imp Ovr Comment	
Cost to Cure Ovr	
Cost to Cure Ovr Comment	

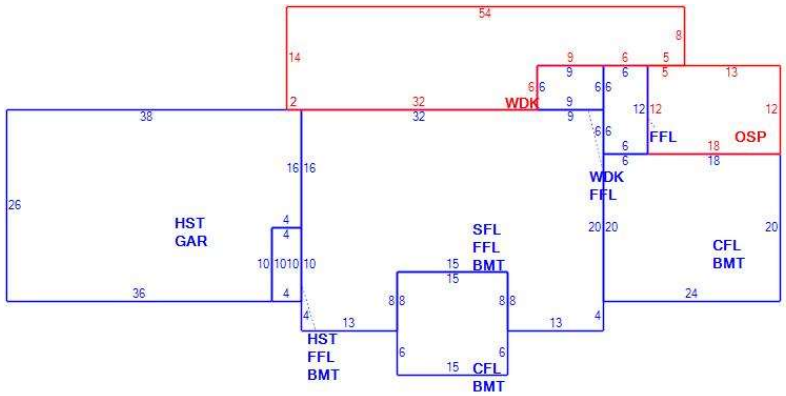

OB - OUTBUILDING & YARD ITEMS(L) / XF - BUILDING EXTRA FEATURES(B)

Code	Description	Su	Sub Type	Lan	Units	Unit Price	Yr Blt	%	Dep.	Cond	Gra	Qual	Apprais Va

BUILDING SUB-AREA SUMMARY SECTION

Subarea	Description	Living	Gross	Eff Area	Unit Cost	Undeprec Value
BMT	BASEMENT	0	1,840		26.98	49,651
CFL	CATHEDRAL CE	690	690		139.03	95,929
FFL	1ST FLOOR	1,276	1,276		134.92	172,159
GAR	GARAGE	0	1,000		53.97	53,968
HST	HALF STORY	520	1,040		67.46	70,159
OSP	SCRN PORCH	0	216		19.99	4,317
SFL	2ND FLOOR	1,110	1,110		134.92	149,763
WDK	WOOD DECK	0	690		26.98	18,619
	Ttl Gross Liv / Lease Area	3,596	7,862			614,566