Property Location 50 PINEYWOODS DR | Map ID 93/ 12/ 20/ / | Bldg Name | State Use 101
Vision ID 6029 | Account # 6112 | Bldg # 1 | Sec # 1 of 1 | Card # 1 of 1 | Print Date 11/22/2024 3:36:30 P

CURRENT OWNER	TOPO TYPE	UTILITY	STREET	LOCATION
WHEELER THOMAS B				
	TOPO WET	EASEMENT	TRAFFIC	CORNER
50 PINEYWOODS DR				
	DRAINAGE		VIEW	COMMUNITY
EAST LONGMEADOW MA 01028				

SUPPLEMENTAL DATA

Alt Prcl ID	Received
SP Permit	NIA
Chapter Land	Field 8
OC Dates	Field 9
In+Ex FY	Field 10
Mailed	Assoc Pid#

GIS ID F_394976_2842227

CURRENT ASSESSMENT

Description	Code	Appraised	Assessed
RESIDNTL.	101	298600	298,600
RES LAND	101	148500	148,500
Total		447,100	447,100

1006

EAST LONGMEADOW

RECORD OF OWNERSHIP

	BK-VOL/PAGE		SALE DATE	Q/U	V/I	SALE PRICE	VC
WHEELER THOMAS B	14698	0171	12-09-2004	U	I	365,000	
GAGNON DAVID G +,	06660	0528	10-23-1987	U	I	183,150	
EQUITY ONE	06167	0530	07-25-1986	U	V	180,000	

PREVIOUS ASSESSMENTS (HISTORY)

Year	Code	Assessed	Year	Code	Assessed	Year	Code	Assessed
2024	101	275,200	2023	101	255,000	2022	101	233,300
	101	148,500		101	134,100		101	120,900
	Total	423,700		Total	389,100		Total	354,200

EXEMPTIONS

Year	Code	Description	Amount
		Total	

OTHER ASSESSMENTS

Code	Description	YEAR	Amount	Comm Int

This signature acknowledges a visit by a Data Collector or Assessor

ASSESSING NEIGHBORHOOD

Nbhd	Nbhd Name		Tracing	Batch
0001			101	MG

NOTES

APPRAISED VALUE SUMMARY

Appraised BLDG. Value (Card)	298,600
Appraised Xf (B) Value (Bldg)	0
Appraised Ob (B) Value (Bldg)	0
Appraised Land Value (Bldg)	148,500
Special Land Value	0
Total Appraised Parcel Value	447,100
Valuation Method	C
Adjustment	
Net Total Appraised Parcel Value	447,100

BUILDING PERMIT RECORD

Permit Id	Issue Date	Type	Description	Amount	Insp Date	% Comp	Date Comp	Comments
B-23-19	01-10-2023	12	REROOF	16,000	06-20-2023	100	06-20-2023	NVC
60	04-01-1989	MN	Manual Note	3,500				POOL A
196	07-01-1987	MN	Manual Note	195,000				SFR

VISIT / CHANGE HISTORY

Date	Type	Is	Id	Cd	Purpose/Result
06-20-2023			425	15	PERMIT VISIT
04-30-2018			333	2	MEASURED
06-28-2005			274	2	MEASURED
04-08-2000			247	14	INSPECTED
11-29-1999			247	2	MEASURED
07-02-1992			131	14	INSPECTED
06-30-1992			200	2	MEASURED

LAND LINE VALUATION SECTION

B	Use Co	Description	Zone	D	Fronta	Depth	Land Units		Unit Price	I. Fact	S.A.	Ac Di	C. Fact	St. Idx	Adj	Notes	Special Pricing				Size A	Adj Unit Pric	Land Value
1	101	ONE FAM	RA				35,865	SF	3.45	1.200	7	LAND	1.00	MG	1.00			0			1.000	4.14	148,500
						Total Card Land Units	0.82	AC	Parcel Total Land Area:			0.82										Total Land Value	148,500

Property Location 50 PINEYWOODS DR | Map ID 93/ 12/ 20/ / | Bldg Name | State Use 101
Vision ID 6029 | Account # 6112 | Bldg # 1 | Sec # 1 of 1 | Card # 1 of 1 | Print Date 11/22/2024 3:36:31 P

CONSTRUCTION DETAIL

Element	Cd	Description
Style	09	CONTEMPORY
Model	01	RESIDENTIAL
Grade	C+	AVG. (+)
Stories	2.00	2 STORY
Foundation	1	CONCRETE
Exterior Wall 1	4	VINYL
Exterior Wall 2		
Roof Structure	1	GABLE
Roof Cover	1	ASPHALT SH
Interior Wall 1	1	DRYWALL
Interior Wall 2		
Interior Floor 1	4	CARPET
Interior Floor 2		
Heat Fuel	2	GAS
Heat Type	1	FORCED H/A
AC Type	03	FULL
Bedrooms	3	
Full Baths	2	
Half Baths	1	
Extra Fixtures	0	
Total Rooms	6	
Bath Style	A	AVERAGE
Half Bath Style	A	AVERAGE
Kitchens	1	
Kitchen Style	A	AVERAGE
Extra Kitchens	0	
Extra Kitchen St	N	NONE
FBM Sqft		
FBM Quality		
FIN ATC Sqft		
FIN ATC Quality		
Fireplaces	1	
WS Flues	0	

CONSTRUCTION DETAIL (CONTINUED)

Element	Cd	Description
Central Vac	1	YES
Basement Floor	12	CONCRETE
Bsmt Garage	0	
Units	1	

MIXED USE

Code	Description	Percentage
101	ONE FAM	100
		0
		0

COST / MARKET VALUATION

Adj Base Rate	125.23
RCN	377,951
Net Other Adj	
Year Built	1987
Effective Year Built	2000
Depreciation Code	GD
Remodel Rating	
Year Remodeled	
Depreciation %	21
Functional Obsol	
External Obsol	
Cost Trend Factor	1
Condition	
% Complete	
Overall % Condition	79
RCNLD	298,600
Dep % Ovr	
Dep Ovr Comment	
Misc Imp Ovr	
Misc Imp Ovr Comment	
Cost to Cure Ovr	
Cost to Cure Ovr Comment	

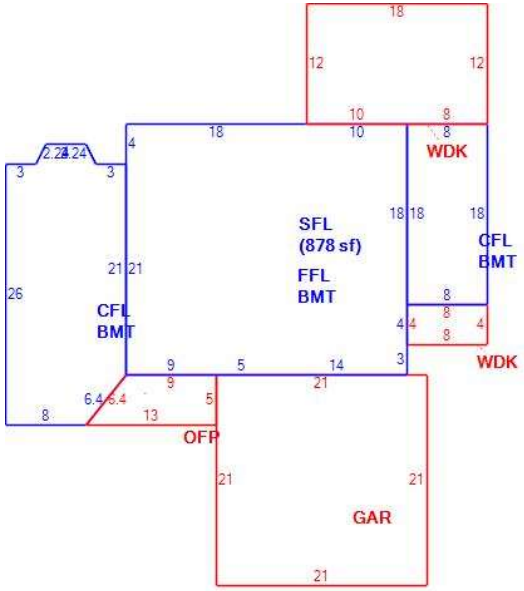

OB - OUTBUILDING & YARD ITEMS(L) / XF - BUILDING EXTRA FEATURES(B)

Code	Description	Su	Sub Type	Lan	Units	Unit Price	Yr Blt	%	Dep.	Cond	Gra	Qual	Apprais Va

BUILDING SUB-AREA SUMMARY SECTION

Subarea	Description	Living	Gross	Eff Area	Unit Cost	Undeprec Value
BMT	BASEMENT	0	1,156		30.08	34,770
CFL	CATHEDRAL CE	456	456		155.14	70,744
FFL	1ST FLOOR	700	700		150.52	105,363
GAR	GARAGE	0	441		60.07	26,491
OFP	OPEN PORCH	0	55		16.42	903
SFL	2ND FLOOR	878	878		150.52	132,155
WDK	WOOD DECK	0	248		30.35	7,526
	Ttl Gross Liv / Lease Area	2,034	3,934			377,951