Property Location 58 MELWOOD AV | Map ID 16/ 10/ 7/ / | Bldg Name | State Use 101
Vision ID 617 | Account # 638 | Bldg # 1 | Sec # 1 of 1 | Card # 1 of 1 | Print Date 11/18/2024 7:04:28 A

CURRENT OWNER	TOPO TYPE	UTILITY	STREET	LOCATION
SEYLER JAY C				
SEYLER TAMATHA L	TOPO WET	EASEMENT	TRAFFIC	CORNER
58 MELWOOD AVE	DRAINAGE		VIEW	COMMUNITY
EAST LONGMEADOW MA 01028				

SUPPLEMENTAL DATA

Alt Prcl ID	Received
SP Permit	NIA
Chapter Land	Field 8
OC Dates	Field 9
In+Ex FY	Field 10
Mailed	Assoc Pid#

GIS ID F_377580_2849724

CURRENT ASSESSMENT

Description	Code	Appraised	Assessed
RESIDNTL.	101	226000	226,000
RES LAND	101	113800	113,800
RESIDNTL.	101	1000	1,000
Total		340,800	340,800

1006
EAST LONGMEADOW

RECORD OF OWNERSHIP

	BK-VOL/PAGE		SALE DATE	Q/U	V/I	SALE PRICE	VC
SEYLER JAY C	19867	0287	06-12-2013	Q	I	249,900	00
MARQUIS TIMOTHY P,	18304	0129	05-15-2010	U	I	215,000	
CONCATO FLORIS R LE,	08036	0077	05-04-1992	U	I	1	1A
CONCATO GUIDO J + FLORIS	04160	0253	07-30-1975	U	I	0	

PREVIOUS ASSESSMENTS (HISTORY)

Year	Code	Assessed	Year	Code	Assessed	Year	Code	Assessed
2024	101	208,200	2023	101	190,300	2022	101	170,400
	101	113,800		101	103,600		101	94,100
	101	1,000		101	600		101	600
	Total	323,000		Total	294,500		Total	265,100

EXEMPTIONS

Year	Code	Description	Amount
		Total	

OTHER ASSESSMENTS

Code	Description	YEAR	Amount	Comm Int

This signature acknowledges a visit by a Data Collector or Assessor

ASSESSING NEIGHBORHOOD

Nbhd	Nbhd Name		Tracing	Batch
0001			101	MA

NOTES

APPRAISED VALUE SUMMARY

Appraised BLDG. Value (Card)	226,000
Appraised Xf (B) Value (Bldg)	0
Appraised Ob (B) Value (Bldg)	1,000
Appraised Land Value (Bldg)	113,800
Special Land Value	0
Total Appraised Parcel Value	340,800
Valuation Method	C
Adjustment	
Net Total Appraised Parcel Value	340,800

BUILDING PERMIT RECORD

Permit Id	Issue Date	Type	Description	Amount	Insp Date	% Comp	Date Comp	Comments
201502359	08-06-2015	62	SOLAR	18,200	04-29-2016	100	04-29-2016	
201402666	10-14-2014	91	INSULATION	2,300		100		
201402139	07-11-2014	62	SOLAR	17,850	03-19-2015	100	03-19-2015	ROOF TOP
201401730	05-23-2014	7	REMODEL	13,500	03-19-2015	100	03-19-2015	CONVERT EFP TO
200	01-01-1984	MN	Manual Note					GARAGE

VISIT / CHANGE HISTORY

Date	Type	Is	Id	Cd	Purpose/Result
04-29-2016			317	15	PERMIT VISIT
03-19-2015			317	15	PERMIT VISIT
06-04-2013			105	15	PERMIT VISIT
02-25-2011			317	16	FIELDREV CHG
02-18-2004			311	3	MEAS+INSPCTD
07-01-1991			131	3	MEAS+INSPCTD
03-29-1985			500	15	PERMIT VISIT

LAND LINE VALUATION SECTION

B	Use Co	Description	Zone	D	Fronta	Depth	Land Units		Unit Price	I. Fact	S.A.	Ac Di	C. Fact	St. Idx	Adj	Notes	Special Pricing				Size A	Adj Unit Pric	Land Value
1	101	ONE FAM	RB				16,450	SF	6.92	1.000	5	LAND	1.00	MA	1.00			0			1.000	6.92	113,800
						Total Card Land Units	0.38	AC	Parcel Total Land Area:			0.38										Total Land Value	113,800

Property Location 58 MELWOOD AV | Map ID 16/ 10/ 7/ / | Bldg Name | State Use 101
Vision ID 617 | Account # 638 | Bldg # 1 | Sec # 1 of 1 | Card # 1 of 1 | Print Date 11/18/2024 7:04:28 A

CONSTRUCTION DETAIL

Element	Cd	Description
Style	05	CAPE
Model	01	RESIDENTIAL
Grade	C	AVERAGE
Stories	1.75	1 3/4 STORIES
Foundation	1	CONCRETE
Exterior Wall 1	4	VINYL
Exterior Wall 2		
Roof Structure	1	GABLE
Roof Cover	1	ASPHALT SH
Interior Wall 1	1	DRYWALL
Interior Wall 2		
Interior Floor 1	3	HARDWOOD
Interior Floor 2		
Heat Fuel	2	GAS
Heat Type	1	FORCED H/A
AC Type	01	NONE
Bedrooms	3	
Full Baths	1	
Half Baths	0	
Extra Fixtures	0	
Total Rooms	6	
Bath Style	A	AVERAGE
Half Bath Style		
Kitchens	1	
Kitchen Style	A	AVERAGE
Extra Kitchens	0	
Extra Kitchen St		
FBM Sqft		
FBM Quality		
FIN ATC Sqft		
FIN ATC Quality		
Fireplaces	1	
WS Flues		

CONSTRUCTION DETAIL (CONTINUED)

Element	Cd	Description
Central Vac	0	NO
Basement Floor	12	CONCRETE
Bsmt Garage		
Units	1	

MIXED USE

Code	Description	Percentage
101	ONE FAM	100
		0
		0

COST / MARKET VALUATION

Adj Base Rate	136.92
RCN	293,525
Net Other Adj	
Year Built	1955
Effective Year Built	1998
Depreciation Code	GV
Remodel Rating	
Year Remodeled	
Depreciation %	23
Functional Obsol	
External Obsol	
Cost Trend Factor	1
Condition	
% Complete	
Overall % Condition	77
RCNLD	226,000
Dep % Ovr	
Dep Ovr Comment	
Misc Imp Ovr	
Misc Imp Ovr Comment	
Cost to Cure Ovr	
Cost to Cure Ovr Comment	

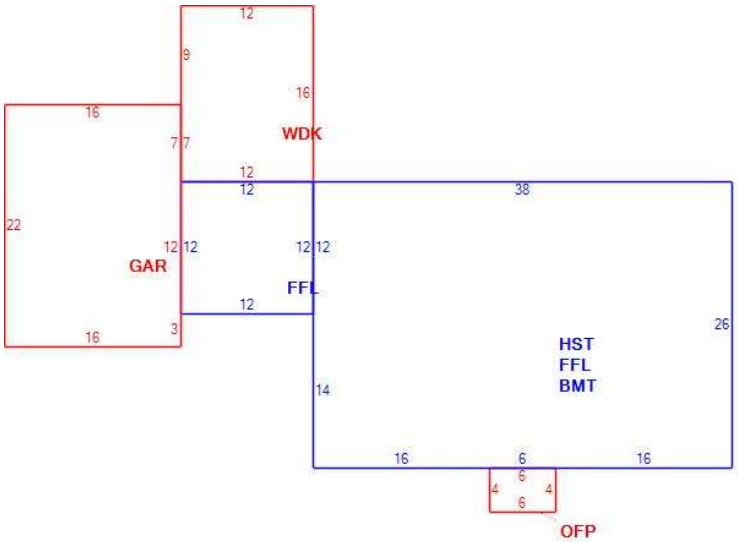

OB - OUTBUILDING & YARD ITEMS(L) / XF - BUILDING EXTRA FEATURES(B)

Code	Description	Su	Sub Type	Lan	Units	Unit Price	Yr Blt	%	Dep.	Cond	Gra	Qual	Apprais Va
02	SHED/FR			L	96	12.00	2013	70	0.00	GD	G	1.25	1,000
SOL	Solar Panels	EX	Extra Fea	B	1	0.00	2014	77	1.00			0.00	0
SOL	Solar Panels	EX	Extra Fea	B	1	1.00	2015	77	1.00			0.00	0

BUILDING SUB-AREA SUMMARY SECTION

Subarea	Description	Living	Gross	Eff Area	Unit Cost	Undeprec Value
BMT	BASEMENT	0	988		29.34	28,987
FFL	1ST FLOOR	1,132	1,132		146.40	165,721
GAR	GARAGE	0	352		58.64	20,642
HST	HALF STORY	494	988		73.20	72,320
OFP	OPEN PORCH	0	24		12.20	293
WDK	WOOD DECK	0	192		28.97	5,563
	Ttl Gross Liv / Lease Area	1,626	3,676			293,525