Property Location 136 PINEHURST DR | Map ID 80/ 1/ 136/ / | Bldg Name | State Use 102
Vision ID 6198 | Account # 6283 | Bldg # 1 | Sec # 1 of 1 | Card # 1 of 1 | Print Date 11/22/2024 4:01:51 P

CURRENT OWNER	TOPO	UTILITIES	STRT / ROAD	LOCATION
CHAPIN CAROL ANN BOARDWAY				
CHAPIN MICHAEL B				
136 PINEHURST DR				
EAST LONGMEADOW MA 01028				

SUPPLEMENTAL DATA

Alt Prcl ID		Received	
SP Permit		NIA	
Chapter La		Field 8	
OC Dates		Field 9	
In+Ex FY		Field 10	
Mailed			
GIS ID	F_392090_2841032	Assoc Pid#	

CURRENT ASSESSMENT

Description	Code	Assessed	Assessed
RESIDNTL.	102	344,000	344,000
	Total	344,000	344,000

1006
EAST LONGMEADOW, MA

VISION

RECORD OF OWNERSHIP

	BK-VOL/PAGE		SALE DATE	Q/U	V/I	SALE PRICE	VC
CHAPIN CAROL ANN BOARDWAY	24767	0288	10-14-2022	Q	I	369,900	00
LANIGAN CHARLES T	23763	0297	03-15-2021	Q	I	280,000	00
DAVIS CECILIA	23290	0246	07-01-2020	Q	I	274,900	00
FORTUNE JOHN E	18817	0317	06-24-2011	U	I	230,000	
DRISCOLL ROBERT R,	18817	0308	06-24-2011	U	I	1	1A

PREVIOUS ASSESSMENTS (HISTORY)

Year	Code	Assessed	Year	Code	Assessed V	Year	Code	Assessed
2024	102	344,300	2023	102	291,300	2022	102	256,100
	Total	344,300		Total	291,300		Total	256,100

EXEMPTIONS

Year	Code	Description	Amount
		Total	0.00

OTHER ASSESSMENTS

Code	Description	Number	Amount	Comm Int

This signature acknowledges a visit by a Data Collector or Assessor

ASSESSING NEIGHBORHOOD

Nbhd	Nbhd Name	B	Tracing	Batch
0001			102	EL

NOTES

BLDG #3 THE ELMS

APPRAISED VALUE SUMMARY

Appraised Bldg. Value (Card)	344,000
Appraised Xf (B) Value (Bldg)	0
Appraised Ob (B) Value (Bldg)	0
Appraised Land Value (Bldg)	0
Special Land Value	0
Total Appraised Parcel Value	344,000
Valuation Method	C
Total Appraised Parcel Value	344,000

BUILDING PERMIT RECORD

Permit Id	Issue Date	Type	Description	Amount	Insp Date	% Comp	Date Comp	Comments
B-23-126	02-23-2023	42	REPAIRS	14,500	07-06-2023	100	07-06-2023	REPAIR WDK
220	09-23-1998	2	DWELLING	112,500		0		

VISIT / CHANGE HISTORY

Date	Id	Type	Is	Cd	Purpose/Result
07-06-2023	334			15	PERMIT VISIT
02-09-2006	311			3	MEAS+INSPCTD
01-04-2002	105			14	INSPECTED
04-05-2000	247			14	INSPECTED

LAND LINE VALUATION SECTION

B	Use Code	Description	Zone	Land Type	Land Units		Unit Price	Size Adj	Site Index	Cond.	Nbhd.	Nbhd. Adj	Notes	Location Adjustment		Adj Unit P	Land Value
1	102	CONDO	PUR	SITE	0	SF	0.00	1.00000		1.00	EL	1.000			0.0000	0	0
				Total Card Land Units	0	SF	Parcel Total Land Area			0.00					Total Land Value		0

Property Location 136 PINEHURST DR | Map ID 80/ 1/ 136/ / | Bldg Name | State Use 102
Vision ID 6198 | Account # 6283 | Bldg # 1 | Sec # 1 of 1 | Card # 1 of 1 | Print Date 11/22/2024 4:01:52 P

CONSTRUCTION DETAIL

Element	Cd	Description
Style	08	CONDO-TNHS
Model	05	RES CONDO
Grade	C+	AVG. (+)
Stories	2.00	2 STORY
Foundation	1	CONCRETE
Interior Wall 1	1	DRYWALL
Interior Wall 2		
Interior Floor 1	4	CARPET
Interior Floor 2		
Heat Fuel	2	GAS
Heat Type	1	FORCED H/A
AC Type	03	FULL
Bedrooms	2	
Full Baths	2	
Half Baths	1	
Extra Fixtures	1	
Total Rooms	5	
Bath Style	G	GOOD
Half Baths	G	GOOD
Num Kitchens	1	
Kitchen Style	G	GOOD
FBM Sqft	700	
FBM Quality	5	FLA VG
Fireplaces	0	
WS Flues	0	
Central Vac		No
Frame	1	WOOD
Bsmt Floor	12	CONCRETE
Bsmt Garage	0	
#Heat Sys	1	
Occupancy	1	
Int Vs Ext	S	

CONSTRUCTION DETAIL (CONTINUED)

Element	Cd	Description

CONDO DATA

Parcel Id	6769	C	0020	Owne	
	THE ELMS	B	1	S	1

Adjust Type	Code	Description	Factor%
Unit Type C			
Unit Locatio	I	INTERIOR	

COST / MARKET VALUATION

Adj Base Rate	161.59
Building Value New	409,558
Year Built	1998
Effective Year Built	2010
Depreciation Code	GD
Remodel Rating	
Year Remodeled	
Depreciation %	11
Functional Obsol	5
External Obsol	
Trend Factor	1
Condition	
Condition %	
Percent Good	84
Cns Sect Rcnld	344,000
Dep % Ovr	
Dep Ovr Comment	
Misc Imp Ovr	
Misc Imp Ovr Comment	
Cost to Cure Ovr	
Cost to Cure Ovr Comment	

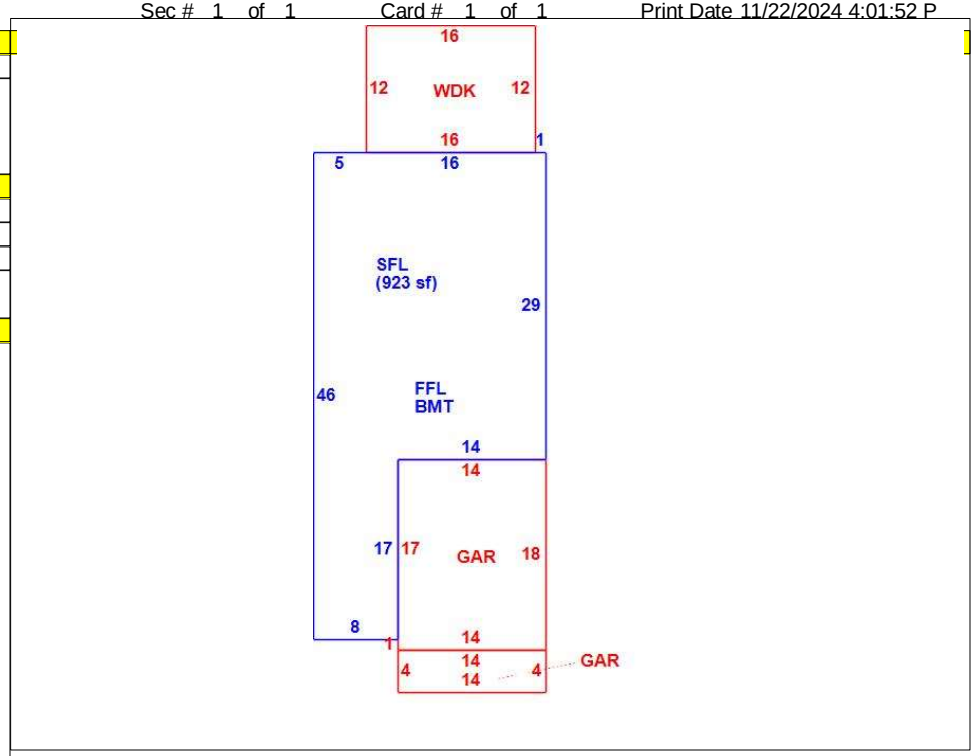

OB - OUTBUILDING & YARD ITEMS(L) / XF - BUILDING EXTRA FEATURES(B)

Code	Description	L/B	Units	Unit Price	Yr Blt	Cond. Cd	% Gd	Grade	Grade Adj.	Appr. Value

BUILDING SUB-AREA SUMMARY SECTION

Code	Description	Living Area	Floor Area	Eff Area	Unit Cost	Undeprec Value
BMT	BASEMENT	0	774		40.74	31,536
FFL	1ST FLOOR	774	774		203.46	157,475
GAR	GARAGE	0	308		81.25	25,025
SFL	2ND FLOOR	923	923		203.46	187,790
WDK	WOOD DECK	0	192		40.27	7,731
	Ttl Gross Liv / Lease Area	1,697	2,971			409,557