Property Location 64 PINE GROVE CR | Map ID 46/ 55/ 11/ / | Bldg Name | State Use 101
Vision ID 6258 | Account # 6344 | Bldg # 1 | Sec # 1 of 1 | Card # 1 of 1 | Print Date 11/22/2024 4:11:07 P

CURRENT OWNER	TOPO TYPE	UTILITY	STREET	LOCATION
MACKENZIE BARBARA G				
RODGERS ROBERT M	TOPO WET	EASEMENT	TRAFFIC	CORNER
64 PINE GROVE CR	DRAINAGE		VIEW	COMMUNITY
EAST LONGMEADOW MA 01028				

GIS ID F_385077_2857698

SUPPLEMENTAL DATA

Alt Prcl ID	Received
SP Permit	NIA
Chapter Land	Field 8
OC Dates	Field 9
In+Ex FY	Field 10
Mailed	Assoc Pid#

CURRENT ASSESSMENT

Description	Code	Appraised	Assessed
RESIDNTL.	101	534000	534,000
RES LAND	101	154600	154,600
Total		688,600	688,600

1006

EAST LONGMEADOW

RECORD OF OWNERSHIP

	BK-VOL/PAGE		SALE DATE	Q/U	V/I	SALE PRICE	VC
MACKENZIE BARBARA G	11906	0405	10-09-2001	U	I	447,284	1
CHAPDELAINE,JOSEPH & SONS INC	11103	0429	02-24-2000	U	V	200,000	1
WILDER NORMA B ET AL,	00147	0075	06-18-1964	U	V	1	
WILDER NORMA B ET AL,	00000	0000		U		0	

PREVIOUS ASSESSMENTS (HISTORY)

Year	Code	Assessed	Year	Code	Assessed	Year	Code	Assessed
2024	101	498,200	2023	101	456,300	2022	101	413,800
	101	154,600		101	140,700		101	142,900
	Total	652,800		Total	597,000		Total	556,700

EXEMPTIONS

Year	Code	Description	Amount
		Total	

OTHER ASSESSMENTS

Code	Description	YEAR	Amount	Comm Int

This signature acknowledges a visit by a Data Collector or Assessor

ASSESSING NEIGHBORHOOD

Nbhd	Nbhd Name		Tracing	Batch
0001			101	NV

NOTES

SUB 834 ORCHARD HILL . WALK-OUT
BASEMENT. 2010 POSSIBLE GARAGE AREA IN
PLACE OF FFL.

APPRAISED VALUE SUMMARY

Appraised BLDG. Value (Card)	534,000
Appraised Xf (B) Value (Bldg)	0
Appraised Ob (B) Value (Bldg)	0
Appraised Land Value (Bldg)	154,600
Special Land Value	0
Total Appraised Parcel Value	688,600
Valuation Method	C
Adjustment	
Net Total Appraised Parcel Value	688,600

BUILDING PERMIT RECORD

Permit Id	Issue Date	Type	Description	Amount	Insp Date	% Comp	Date Comp	Comments
B-24-329	05-29-2024	91	INSULATION	4,463		0		
201800422	02-07-2018	7	REMODEL	25,500	06-20-2018	100	06-20-2018	BATH
99	05-11-2004	4	ADDITION	25,430				4 X 12 DORMER/FI
65	04-09-2001	2	DWELLING	442,410				

VISIT / CHANGE HISTORY

Date	Type	Is	Id	Cd	Purpose/Result
06-20-2018			333	15	PERMIT VISIT
04-13-2012			317	16	FIELDREV CHG
09-28-2010			311	2	MEASURED
01-06-2005			311	14	INSPECTED
09-18-2002			250	22	MAILER SENT
09-16-2002			274	2	MEASURED
12-07-2001			105	2	MEASURED

LAND LINE VALUATION SECTION

B	Use Co	Description	Zone	D	Fronta	Depth	Land Units		Unit Price	I. Fact	S.A.	Ac Di	C. Fact	St. Idx	Adj	Notes	Special Pricing				Size A	Adj Unit Pric	Land Value
1	101	ONE FAM	RA				36,726	SF	3.37	1.250	9	LAND	1.00	NV	1.00			0			1.000	4.21	154,600
Total Card Land Units							0.84	AC	Parcel Total Land Area:			0.84									Total Land Value		154,600

Property Location 64 PINE GROVE CR | Map ID 46/ 55/ 11/ / | Bldg Name | State Use 101
Vision ID 6258 | Account # 6344 | Bldg # 1 | Sec # 1 of 1 | Card # 1 of 1 | Print Date 11/22/2024 4:11:07 P

CONSTRUCTION DETAIL

Element	Cd	Description
Style	05	CAPE
Model	01	RESIDENTIAL
Grade	B+	GOOD (+)
Stories	1.75	1 3/4 STORIES
Foundation	1	CONCRETE
Exterior Wall 1	4	VINYL
Exterior Wall 2	16	STONE VENR
Roof Structure	1	GABLE
Roof Cover	1	ASPHALT SH
Interior Wall 1	1	DRYWALL
Interior Wall 2		
Interior Floor 1	4	CARPET
Interior Floor 2	3	HARDWOOD
Heat Fuel	2	GAS
Heat Type	1	FORCED H/A
AC Type	03	FULL
Bedrooms	3	
Full Baths	2	
Half Baths	0	
Extra Fixtures	1	
Total Rooms	9	
Bath Style	G	GOOD
Half Bath Style		
Kitchens	1	
Kitchen Style	G	GOOD
Extra Kitchens	0	
Extra Kitchen St		
FBM Sqft	355	
FBM Quality	1	
FIN ATC Sqft		
FIN ATC Quality		
Fireplaces	1	
WS Flues		

CONSTRUCTION DETAIL (CONTINUED)

Element	Cd	Description
Central Vac	1	YES
Basement Floor	12	CONCRETE
Bsmt Garage		
Units	1	

MIXED USE

Code	Description	Percentage
101	ONE FAM	100
		0
		0

COST / MARKET VALUATION

Adj Base Rate	100.47
RCN	613,842
Net Other Adj	
Year Built	2001
Effective Year Built	2008
Depreciation Code	GD
Remodel Rating	
Year Remodeled	
Depreciation %	13
Functional Obsol	
External Obsol	
Cost Trend Factor	1
Condition	
% Complete	
Overall % Condition	87
RCNLD	534,000
Dep % Ovr	
Dep Ovr Comment	
Misc Imp Ovr	
Misc Imp Ovr Comment	
Cost to Cure Ovr	
Cost to Cure Ovr Comment	

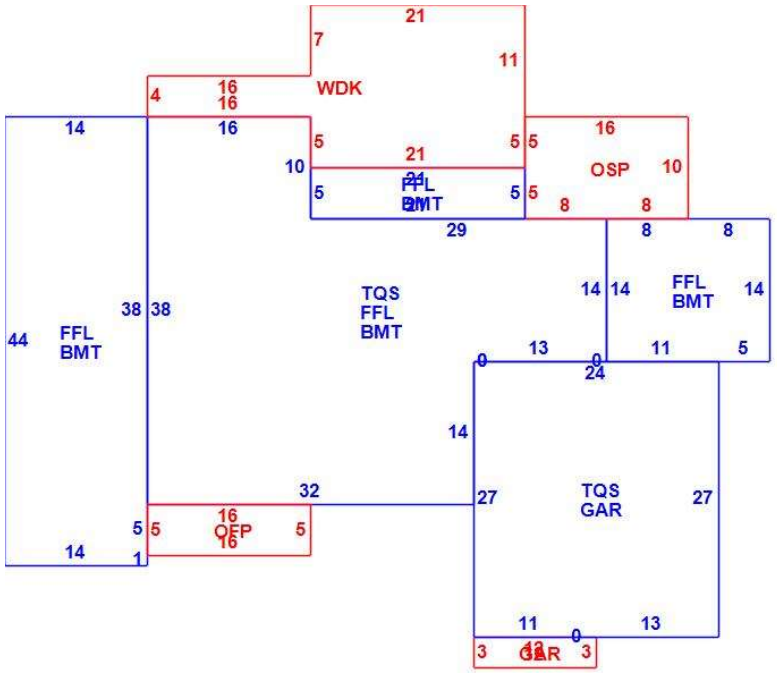

OB - OUTBUILDING & YARD ITEMS(L) / XF - BUILDING EXTRA FEATURES(B)

Code	Description	Su	Sub Type	Lan	Units	Unit Price	Yr Blt	%	Dep.	Cond	Gra	Qual	Apprais Va

BUILDING SUB-AREA SUMMARY SECTION

Subarea	Description	Living	Gross	Eff Area	Unit Cost	Undeprec Value
BMT	BASEMENT	0	2,183		27.79	60,676
FFL	1ST FLOOR	2,183	2,183		138.85	303,103
GAR	GARAGE	0	684		55.62	38,044
OFP	OPEN PORCH	0	80		13.88	1,111
OSP	SCRN PORCH	0	160		20.83	3,332
TQS	3/4 STORY	1,415	1,886		104.17	196,468
WDK	WOOD DECK	0	400		27.77	11,108
	Ttl Gross Liv / Lease Area	3,598	7,576			613,842