Property Location 83 CANTERBURY CR | Map ID 20/ 19/ 19/ / | Bldg Name | State Use 101
Vision ID 6378 | Account # 6471 | Bldg # 1 | Sec # 1 of 1 | Card # 1 of 1 | Print Date 11/22/2024 4:29:34 P

CURRENT OWNER	TOPO TYPE	UTILITY	STREET	LOCATION
PELLETIER JEAN MARC				
PELLETIER ANNE HEYN	TOPO WET	EASEMENT	TRAFFIC	CORNER
83 CANTERBURY CR	DRAINAGE		VIEW	COMMUNITY
EAST LONGMEADOW MA 01028				

SUPPLEMENTAL DATA

Alt Prcl ID	Received
SP Permit	NIA
Chapter Land	Field 8
OC Dates	Field 9
In+Ex FY	Field 10
Mailed	Assoc Pid#

GIS ID F_380539_2844100

CURRENT ASSESSMENT

Description	Code	Appraised	Assessed
RESIDNTL.	101	431500	431,500
RES LAND	101	153000	153,000
RESIDNTL.	101	900	900
Total		585,400	585,400

1006
EAST LONGMEADOW

RECORD OF OWNERSHIP

	BK-VOL/PAGE		SALE DATE	Q/U	V/I	SALE PRICE	VC
PELLETIER JEAN MARC	13520	0282	08-25-2003	U	V	70,000	1P
DAVIS JOHN H + STEPHEN A,	09348	0266	12-27-1995	U	V	745,000	1
ASM & CO INC	00000	0000		U		0	

PREVIOUS ASSESSMENTS (HISTORY)

Year	Code	Assessed	Year	Code	Assessed	Year	Code	Assessed
2024	101	403,000	2023	101	373,800	2022	101	337,200
	101	153,000		101	137,700		101	140,500
	101	900		101	500		101	500
	Total	556,900		Total	512,000		Total	478,200

EXEMPTIONS

Year	Code	Description	Amount
		Total	

OTHER ASSESSMENTS

Code	Description	YEAR	Amount	Comm Int

This signature acknowledges a visit by a Data Collector or Assessor

APPRAISED VALUE SUMMARY

Appraised BLDG. Value (Card)	431,500
Appraised Xf (B) Value (Bldg)	0
Appraised Ob (B) Value (Bldg)	900
Appraised Land Value (Bldg)	153,000
Special Land Value	0
Total Appraised Parcel Value	585,400
Valuation Method	C
Adjustment	
Net Total Appraised Parcel Value	585,400

ASSESSING NEIGHBORHOOD

Nbhd	Nbhd Name		Tracing	Batch
0001			101	NV

NOTES

SUB DIV 868 PHASE 4

BUILDING PERMIT RECORD

Permit Id	Issue Date	Type	Description	Amount	Insp Date	% Comp	Date Comp	Comments
226	09-08-2003	2	DWELLING	154,400				OC 2/3/2004

VISIT / CHANGE HISTORY

Date	Type	Is	Id	Cd	Purpose/Result
03-15-2018			333	3	MEAS+INSPCTD
07-11-2008			317	14	INSPECTED
06-03-2008			250	22	MAILER SENT
12-28-2006			311	15	PERMIT VISIT
02-14-2006			250	22	MAILER SENT
12-19-2005			311	2	MEASURED
12-23-2004			311	15	PERMIT VISIT

LAND LINE VALUATION SECTION

B	Use Co	Description	Zone	D	Fronta	Depth	Land Units		Unit Price	I. Fact	S.A.	Ac Di	C. Fact	St. Idx	Adj	Notes	Special Pricing				Size A	Adj Unit Pric	Land Value
1	101	ONE FAM	RA				31,938	SF	3.83	1.250	9	LAND	1.00	NV	1.00			0			1.000	4.79	153,000
Total Card Land Units							0.73	AC	Parcel Total Land Area:			0.73									Total Land Value		153,000

Property Location 83 CANTERBURY CR | Map ID 20/ 19/ 19/ / | Bldg Name | State Use 101
Vision ID 6378 | Account # 6471 | Bldg # 1 | Sec # 1 of 1 | Card # 1 of 1 | Print Date 11/22/2024 4:29:34 P

CONSTRUCTION DETAIL

Element	Cd	Description
Style	06	COLONIAL
Model	01	RESIDENTIAL
Grade	B-	GOOD (-)
Stories	2.00	2 STORY
Foundation	1	CONCRETE
Exterior Wall 1	4	VINYL
Exterior Wall 2		
Roof Structure	1	GABLE
Roof Cover	1	ASPHALT SH
Interior Wall 1	1	DRYWALL
Interior Wall 2		
Interior Floor 1	3	HARDWOOD
Interior Floor 2	4	CARPET
Heat Fuel	2	GAS
Heat Type	1	FORCED H/A
AC Type	03	FULL
Bedrooms	4	
Full Baths	2	
Half Baths	1	
Extra Fixtures	2	
Total Rooms	9	
Bath Style	G	GOOD
Half Bath Style	G	GOOD
Kitchens	1	
Kitchen Style	G	GOOD
Extra Kitchens	0	
Extra Kitchen St		
FBM Sqft		
FBM Quality		
FIN ATC Sqft		
FIN ATC Quality		
Fireplaces	1	
WS Flues		

CONSTRUCTION DETAIL (CONTINUED)

Element	Cd	Description
Central Vac	0	NO
Basement Floor	12	CONCRETE
Bsmt Garage		
Units	1	

MIXED USE

Code	Description	Percentage
101	ONE FAM	100
		0
		0

COST / MARKET VALUATION

Adj Base Rate	120.08
RCN	490,287
Net Other Adj	
Year Built	2003
Effective Year Built	2009
Depreciation Code	GD
Remodel Rating	
Year Remodeled	
Depreciation %	12
Functional Obsol	
External Obsol	
Cost Trend Factor	1
Condition	
% Complete	
Overall % Condition	88
RCNLD	431,500
Dep % Ovr	
Dep Ovr Comment	
Misc Imp Ovr	
Misc Imp Ovr Comment	
Cost to Cure Ovr	
Cost to Cure Ovr Comment	

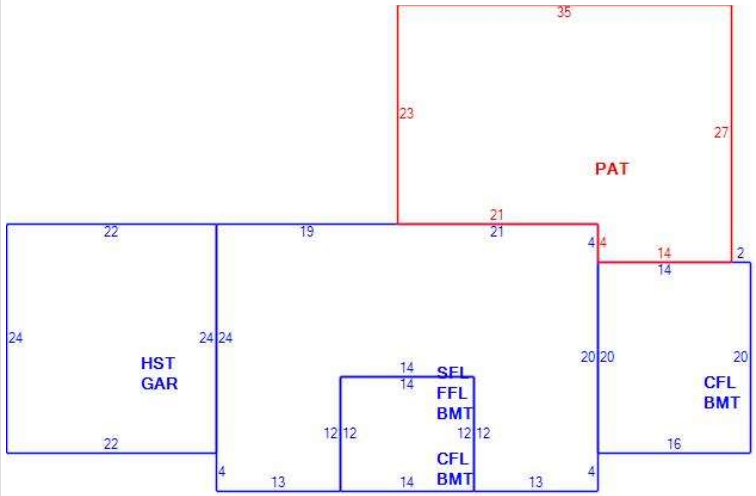

OB - OUTBUILDING & YARD ITEMS(L) / XF - BUILDING EXTRA FEATURES(B)

Code	Description	Su	Sub Type	Lan	Units	Unit Price	Yr Blt	%	Dep.	Cond	Gra	Qual	Apprais Va
02	SHED/FR			L	120	12.00	2010	60	0.00	AV	A	1.00	900

BUILDING SUB-AREA SUMMARY SECTION

Subarea	Description	Living	Gross	Eff Area	Unit Cost	Undeprec Value
BMT	BASEMENT	0	1,440		30.52	43,947
CFL	CATHEDRAL CE	488	488		157.29	76,755
FFL	1ST FLOOR	952	952		152.59	145,270
GAR	GARAGE	0	528		60.98	32,198
HST	HALF STORY	264	528		76.30	40,285
PAT	PATIO	0	861		7.62	6,562
SFL	2ND FLOOR	952	952		152.59	145,270
	Ttl Gross Liv / Lease Area	2,656	5,749			490,287