Property Location 166 NOTTINGHAM DR | Map ID 75/ 61/ 36/ / | Bldg Name | State Use 101
Vision ID 6437 | Account # 6539 | Bldg # 1 | Sec # 1 of 1 | Card # 1 of 1 | Print Date 11/22/2024 4:38:30 P

CURRENT OWNER	TOPO TYPE	UTILITY	STREET	LOCATION
WIGGINS MICHAEL D				
WIGGINS HAUGHTON MIRIAM	TOPO WET	EASEMENT	TRAFFIC	CORNER
166 NOTTINGHAM DR	DRAINAGE		VIEW	COMMUNITY
EAST LONGMEADOW MA 01028				

GIS ID F_392061_2850254

SUPPLEMENTAL DATA

Alt Prcl ID	Received
SP Permit	NIA
Chapter Land	Field 8
OC Dates	Field 9
In+Ex FY	Field 10
Mailed	Assoc Pid#

CURRENT ASSESSMENT

Description	Code	Appraised	Assessed
RESIDNTL.	101	484300	484,300
RES LAND	101	156800	156,800
RESIDNTL.	101	20600	20,600
Total		661,700	661,700

1006

EAST LONGMEADOW

RECORD OF OWNERSHIP

	BK-VOL/PAGE		SALE DATE	Q/U	V/I	SALE PRICE	VC
WIGGINS MICHAEL D	12482	0500	07-31-2002	U	V	79,900	1J
APPLE LAND,DEVELOPMENT INC	11946	0104	10-31-2001	U	V	1	1F
ROLLINS,ROBERT H	11632	0459	05-10-2001	U	V	453,000	1
ROLLINS,ROBERT H	00000	0000		U		0	

PREVIOUS ASSESSMENTS (HISTORY)

Year	Code	Assessed	Year	Code	Assessed	Year	Code	Assessed
2024	101	453,400	2023	101	421,700	2022	101	381,700
	101	156,800		101	142,800		101	145,200
	101	20,600		101	19,200		101	19,200
	Total	630,800		Total	583,700		Total	546,100

EXEMPTIONS

Year	Code	Description	Amount
		Total	

OTHER ASSESSMENTS

Code	Description	YEAR	Amount	Comm Int

This signature acknowledges a visit by a Data Collector or Assessor

ASSESSING NEIGHBORHOOD

Nbhd	Nbhd Name		Tracing	Batch
0001			101	NV

NOTES

SUB DIV 875

APPRAISED VALUE SUMMARY

Appraised BLDG. Value (Card)	484,300
Appraised Xf (B) Value (Bldg)	0
Appraised Ob (B) Value (Bldg)	20,600
Appraised Land Value (Bldg)	156,800
Special Land Value	0
Total Appraised Parcel Value	661,700
Valuation Method	C
Adjustment	
Net Total Appraised Parcel Value	661,700

BUILDING PERMIT RECORD

Permit Id	Issue Date	Type	Description	Amount	Insp Date	% Comp	Date Comp	Comments
B-23-884	12-18-2023	91	INSULATION	4,500		0		
180	06-25-2007	11	POOL	24,500		0		20 X 40 INGROUND
251	08-29-2002	2	DWELLING	185,000				OC 6/3/2003

VISIT / CHANGE HISTORY

Date	Type	Is	Id	Cd	Purpose/Result
06-25-2018			333	4	INFO AT DOOR
03-21-2008			317	15	PERMIT VISIT
04-03-2007			250	22	MAILER SENT
07-20-2006			311	1	LEFT NOTICE
01-13-2005			311	15	PERMIT VISIT
02-11-2004			311	15	PERMIT VISIT
02-27-2003			274	2	MEASURED

LAND LINE VALUATION SECTION

B	Use Co	Description	Zone	D	Fronta	Depth	Land Units		Unit Price	I. Fact	S.A.	Ac Di	C. Fact	St. Idx	Adj	Notes	Special Pricing				Size A	Adj Unit Pric	Land Value
1	101	ONE FAM	RA				40,000	SF	3.12	1.250	9	LAND	1.00	NV	1.00			0			1.000	3.9	156,000
1	101	ONE FAM	RA				0.110	AC	7,000.00	1.000	0		1.00	NV	1.00			0			1.000	7,000	800
						Total Card Land Units	1.03	AC	Parcel Total Land Area:	1.03												Total Land Value	156,800

Property Location 166 NOTTINGHAM DR | Map ID 75/ 61/ 36/ / | Bldg Name | State Use 101
Vision ID 6437 | Account # 6539 | Bldg # 1 | Sec # 1 of 1 | Card # 1 of 1 | Print Date 11/22/2024 4:38:30 P

CONSTRUCTION DETAIL

Element	Cd	Description
Style	06	COLONIAL
Model	01	RESIDENTIAL
Grade	B+	GOOD (+)
Stories	2.00	2 STORY
Foundation	1	CONCRETE
Exterior Wall 1	4	VINYL
Exterior Wall 2	8	BRICK VENR
Roof Structure	2	HIP
Roof Cover	1	ASPHALT SH
Interior Wall 1	1	DRYWALL
Interior Wall 2		
Interior Floor 1	3	HARDWOOD
Interior Floor 2	4	CARPET
Heat Fuel	2	GAS
Heat Type	1	FORCED H/A
AC Type	03	FULL
Bedrooms	4	
Full Baths	2	
Half Baths	1	
Extra Fixtures	3	
Total Rooms	7	
Bath Style	V	VERY GOOD
Half Bath Style	G	GOOD
Kitchens	1	
Kitchen Style	G	GOOD
Extra Kitchens	0	
Extra Kitchen St		
FBM Sqft	539	
FBM Quality	3	
FIN ATC Sqft		
FIN ATC Quality		
Fireplaces	1	
WS Flues		

CONSTRUCTION DETAIL (CONTINUED)

Element	Cd	Description
Central Vac	1	YES
Basement Floor	12	CONCRETE
Bsmt Garage		
Units	1	

MIXED USE

Code	Description	Percentage
101	ONE FAM	100
		0
		0

COST / MARKET VALUATION

Adj Base Rate	120.59
RCN	550,338
Net Other Adj	
Year Built	2003
Effective Year Built	2009
Depreciation Code	GD
Remodel Rating	
Year Remodeled	
Depreciation %	12
Functional Obsol	
External Obsol	
Cost Trend Factor	1
Condition	
% Complete	
Overall % Condition	88
RCNLD	484,300
Dep % Ovr	
Dep Ovr Comment	
Misc Imp Ovr	
Misc Imp Ovr Comment	
Cost to Cure Ovr	
Cost to Cure Ovr Comment	

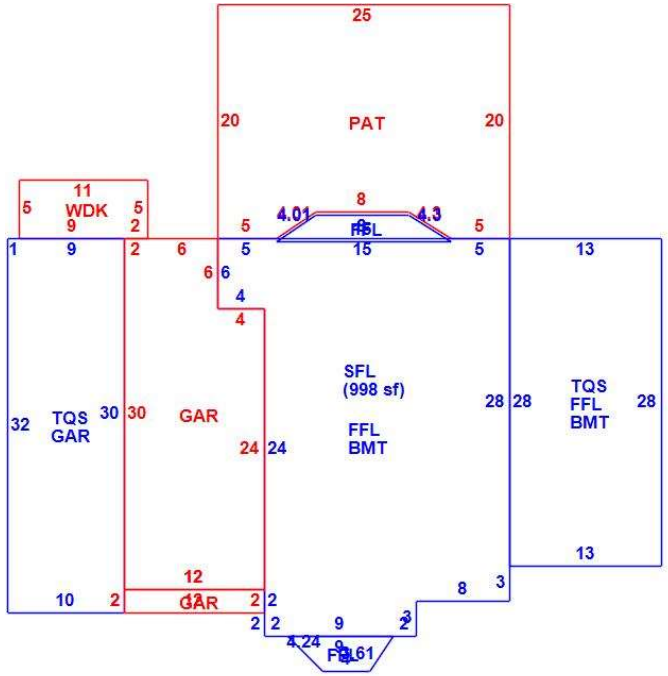

OB - OUTBUILDING & YARD ITEMS(L) / XF - BUILDING EXTRA FEATURES(B)

Code	Description	Su	Sub Type	Lan	Units	Unit Price	Yr Blt	%	Dep.	Cond	Gra	Qual	Apprais Va
02	SHED/FR			L	288	12.00	2007	70	0.00	GD	A	1.00	2,400
11	POOL I-V	OB	Outbuildi	L	800	29.00	2007	70	0.00	GD	A	1.00	16,200
14	SCRN HSE			L	143	20.00	2015	70	0.00	GD	A	1.00	2,000

BUILDING SUB-AREA SUMMARY SECTION

Subarea	Description	Living	Gross	Eff Area	Unit Cost	Undeprec Value
BMT	BASEMENT	0	1,078		34.92	37,642
FFL	1ST FLOOR	1,124	1,124		174.27	195,877
GAR	GARAGE	0	680		69.71	47,401
PAT	PATIO	0	474		8.82	4,182
SFL	2ND FLOOR	998	998		174.27	173,919
TQS	3/4 STORY	513	684		130.70	89,399
WDK	WOOD DECK	0	55		34.85	1,917
	Ttl Gross Liv / Lease Area	2,635	5,093			550,338