Property Location 7 PEACHTREE RD | Map ID 74/ 29/ 3R/ / | Bldg Name | State Use 101
Vision ID 6612 | Account # 6720 | Bldg # 1 | Sec # 1 of 1 | Card # 1 of 1 | Print Date 11/25/2024 7:25:06 A

CURRENT OWNER	TOPO TYPE	UTILITY	STREET	LOCATION
ROBICHAUD JONATHAN E				
ROBICHAUD MARILYN	TOPO WET	EASEMENT	TRAFFIC	CORNER
7 PEACHTREE RD	DRAINAGE		VIEW	COMMUNITY
EAST LONGMEADOW MA 01028				

SUPPLEMENTAL DATA

Alt Prcl ID		Received	
SP Permit		NIA	
Chapter Land		Field 8	
OC Dates	12/6/2011	Field 9	
In+Ex FY		Field 10	
Mailed		Assoc Pid#	

GIS ID F_390192_2851065

CURRENT ASSESSMENT

Description	Code	Appraised	Assessed
RESIDNTL.	101	457600	457,600
RES LAND	101	153000	153,000
RESIDNTL.	101	22700	22,700
Total		633,300	633,300

1006
EAST LONGMEADOW

RECORD OF OWNERSHIP

RECORD OF OWNERSHIP	BK-VOL/PAGE		SALE DATE	Q/U	V/I	SALE PRICE	VC
ROBICHAUD JONATHAN E	21287	0466	07-29-2016	Q	I	430,000	00
COLANTONI PAUL	19038	0103	12-14-2011	U	I	414,125	
BEDROCK FINANCIAL LLC TRUSTEE,	18477	0070	09-27-2010	U	V	112,000	
CABOT REAL ESTATE LLC,	14323	0474	07-09-2004	U	V	75,000	1
ROBBINS MARK S & MARIA A	00000	0000		U		0	

PREVIOUS ASSESSMENTS (HISTORY)

Year	Code	Assessed	Year	Code	Assessed	Year	Code	Assessed
2024	101	428,100	2023	101	393,600	2022	101	354,700
	101	153,000		101	137,500		101	123,800
	101	22,700		101	20,800			
	Total	603,800		Total	551,900		Total	478,500

EXEMPTIONS

Year	Code	Description	Amount
		Total	

OTHER ASSESSMENTS

Code	Description	YEAR	Amount	Comm Int

This signature acknowledges a visit by a Data Collector or Assessor

ASSESSING NEIGHBORHOOD

Nbhd	Nbhd Name		Tracing	Batch
0001			101	NV

NOTES

PARCEL SPLIT #974

PARCEL SPLIT #1016

APPRAISED VALUE SUMMARY

Appraised BLDG. Value (Card)	457,600
Appraised Xf (B) Value (Bldg)	0
Appraised Ob (B) Value (Bldg)	22,700
Appraised Land Value (Bldg)	153,000
Special Land Value	0
Total Appraised Parcel Value	633,300
Valuation Method	C
Adjustment	
Net Total Appraised Parcel Value	633,300

BUILDING PERMIT RECORD

Permit Id	Issue Date	Type	Description	Amount	Insp Date	% Comp	Date Comp	Comments
202102869	09-21-2021	11	POOL	19,870	06-21-2022	100	05-27-2022	18X36 IG POOL
111	05-10-2011	2	DWELLING	175,000				OC 12/6/2011 58X

VISIT / CHANGE HISTORY

Date	Type	Is	Id	Cd	Purpose/Result
06-21-2022		1	334	15	PERMIT VISIT
09-23-2016			317	3	MEAS+INSPCTD
08-02-2012			400	GC	GENERAL
07-06-2012			317	2	MEASURED
12-05-2011			400	25	OC VISIT

LAND LINE VALUATION SECTION

B	Use Co	Description	Zone	D	Fronta	Depth	Land Units		Unit Price	I. Fact	S.A.	Ac Di	C. Fact	St. Idx	Adj	Notes	Special Pricing				Size A	Adj Unit Pric	Land Value
1	101	ONE FAM	RA				31,035	SF	3.94	1.250	8	LAND	1.00	NG	1.00			0			1.000	4.93	153,000
						Total Card Land Units	0.71	AC	Parcel Total Land Area:			0.71										Total Land Value	153,000

Property Location 7 PEACHTREE RD | Map ID 74/ 29/ 3R/ / | Bldg Name | State Use 101
Vision ID 6612 | Account # 6720 | Bldg # 1 | Sec # 1 of 1 | Card # 1 of 1 | Print Date 11/25/2024 7:25:07 A

CONSTRUCTION DETAIL

Element	Cd	Description
Style	06	COLONIAL
Model	01	RESIDENTIAL
Grade	B	GOOD
Stories	2.00	2 STORY
Foundation	1	CONCRETE
Exterior Wall 1	4	VINYL
Exterior Wall 2		
Roof Structure	1	GABLE
Roof Cover	1	ASPHALT SH
Interior Wall 1	1	DRYWALL
Interior Wall 2		
Interior Floor 1	3	HARDWOOD
Interior Floor 2	4	CARPET
Heat Fuel	2	GAS
Heat Type	1	FORCED H/A
AC Type	03	FULL
Bedrooms	4	
Full Baths	2	
Half Baths	0	
Extra Fixtures	2	
Total Rooms	7	
Bath Style	V	VERY GOOD
Half Bath Style		
Kitchens	1	
Kitchen Style	G	GOOD
Extra Kitchens	0	
Extra Kitchen St		
FBM Sqft	623	
FBM Quality	3	
FIN ATC Sqft		
FIN ATC Quality		
Fireplaces	1	
WS Flues		

CONSTRUCTION DETAIL (CONTINUED)

Element	Cd	Description
Central Vac	1	YES
Basement Floor	12	CONCRETE
Bsmt Garage		
Units	1	

MIXED USE

Code	Description	Percentage
101	ONE FAM	100
		0
		0

COST / MARKET VALUATION

Adj Base Rate	123.30
RCN	492,095
Net Other Adj	
Year Built	2011
Effective Year Built	2014
Depreciation Code	GD
Remodel Rating	
Year Remodeled	
Depreciation %	7
Functional Obsol	
External Obsol	
Cost Trend Factor	1
Condition	
% Complete	
Overall % Condition	93
RCNLD	457,600
Dep % Ovr	
Dep Ovr Comment	
Misc Imp Ovr	
Misc Imp Ovr Comment	
Cost to Cure Ovr	
Cost to Cure Ovr Comment	

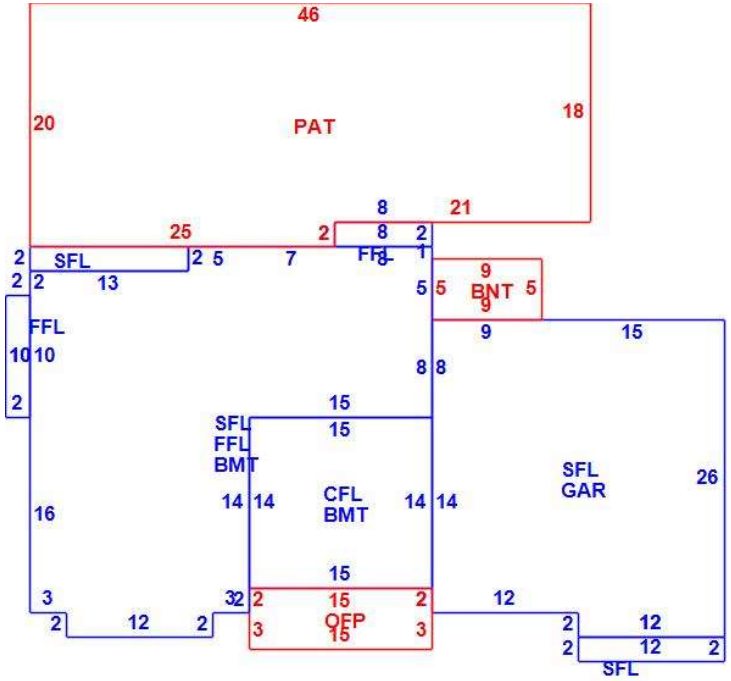

OB - OUTBUILDING & YARD ITEMS(L) / XF - BUILDING EXTRA FEATURES(B)

Code	Description	Su	Sub Type	Lan	Units	Unit Price	Yr Blt	%	Dep.	Cond	Gra	Qual	Apprais Va
21	PAVILLION/C	OB	Outbuildi	L	216	20.00	2018	70	0.00	GD	G	1.25	3,800
02	SHED/FR			L	240	12.00	2022	70	0.00	GD	G	1.25	2,500
11	POOL I-V	OB	Outbuildi	L	648	29.00	2022	70	0.00	GD	G	1.25	16,400

BUILDING SUB-AREA SUMMARY SECTION

Subarea	Description	Living	Gross	Eff Area	Unit Cost	Undeprec Value
BMT	BASEMENT	0	958		34.20	32,761
BNT	BSMT ENTRY	0	45		7.58	341
CFL	CATHEDRAL CE	210	210		175.50	36,856
FFL	1ST FLOOR	784	784		170.63	133,773
GAR	GARAGE	0	600		68.25	40,951
OFP	OPEN PORCH	0	75		18.20	1,365
PAT	PATIO	0	878		8.55	7,508
SFL	2ND FLOOR	1,398	1,398		170.63	238,540
	Ttl Gross Liv / Lease Area	2,392	4,948			492,095