Property Location 292 WESTWOOD AV | Map ID 5/ 30/ G/ / | Bldg Name | State Use 101
Vision ID 6619 | Account # 6729 | Bldg # 1 | Sec # 1 of 1 | Card # 1 of 1 | Print Date 11/25/2024 7:26:12 A

CURRENT OWNER	TOPO TYPE	UTILITY	STREET	LOCATION
LYNCH JAMES B				
LYNCH OLGA A	TOPO WET	EASEMENT	TRAFFIC	CORNER
290 WESTWOOD AV	DRAINAGE		VIEW	COMMUNITY
EAST LONGMEADOW MA 01028				

GIS ID F_376959_2849532

SUPPLEMENTAL DATA

Alt Prcl ID	Received
SP Permit	NIA
Chapter Land	Field 8
OC Dates	Field 9
In+Ex FY	Field 10
Mailed	Assoc Pid#

CURRENT ASSESSMENT

Description	Code	Appraised	Assessed
RESIDNTL.	101	253300	253,300
RES LAND	101	116200	116,200
	Total	369,500	369,500

1006

EAST LONGMEADOW

RECORD OF OWNERSHIP

	BK-VOL/PAGE		SALE DATE	Q/U	V/I	SALE PRICE	VC
LYNCH JAMES B	21872	0234	09-25-2017	U	I	280,000	1T
HOWELL CONSTANCE M HEIRS & DEV	15260	0170	08-18-2005	U	I	100	1A
HOWELL CHARLES M	03776	0491	02-21-1973	U	I	0	

PREVIOUS ASSESSMENTS (HISTORY)

Year	Code	Assessed	Year	Code	Assessed	Year	Code	Assessed
2024	101	235,400	2023	101	217,500	2022	101	194,900
	101	116,200		101	106,200		101	96,600
	Total	351,600		Total	323,700		Total	291,500

EXEMPTIONS

Year	Code	Description	Amount
		Total	

OTHER ASSESSMENTS

Code	Description	YEAR	Amount	Comm Int

This signature acknowledges a visit by a Data Collector or Assessor

ASSESSING NEIGHBORHOOD

Nbhd	Nbhd Name		Tracing	Batch
0001			101	MA

NOTES

SUB DIV #610 + 784 SUB DIV 969-FY2011

APPRAISED VALUE SUMMARY

Appraised BLDG. Value (Card)	253,300
Appraised Xf (B) Value (Bldg)	0
Appraised Ob (B) Value (Bldg)	0
Appraised Land Value (Bldg)	116,200
Special Land Value	0
Total Appraised Parcel Value	369,500
Valuation Method	C
Adjustment	
Net Total Appraised Parcel Value	369,500

BUILDING PERMIT RECORD

Permit Id	Issue Date	Type	Description	Amount	Insp Date	% Comp	Date Comp	Comments

VISIT / CHANGE HISTORY

Date	Type	Is	Id	Cd	Purpose/Result
11-30-2021			334	2	MEASURED
10-18-2013			317	3	MEAS+INSPCTD
04-20-1992			131	14	INSPECTED
04-01-1992			107	22	MAILER SENT
09-12-1990			131	2	MEASURED
02-21-1985			250	1	LEFT NOTICE

LAND LINE VALUATION SECTION

B	Use Co	Description	Zone	D	Fronta	Depth	Land Units		Unit Price	I. Fact	S.A.	Ac Di	C. Fact	St. Idx	Adj	Notes	Special Pricing				Size A	Adj Unit Pric	Land Value
1	101	ONE FAM	RB				40,000	SF	3.12	1.000	5	LAND	1.00	MA	1.00			0	TRF2	0.9	1.000	2.81	112,400
1	101	ONE FAM	RB				0.540	AC	7,000.00	1.000	0		1.00	MA	1.00			0			1.000	7,000	3,800
						Total Card Land Units	1.46	AC	Parcel Total Land Area:	1.46												Total Land Value	116,200

Property Location 292 WESTWOOD AV | Map ID 5/ 30/ G/ / | Bldg Name | State Use 101
Vision ID 6619 | Account # 6729 | Bldg # 1 | Sec # 1 of 1 | Card # 1 of 1 | Print Date 11/25/2024 7:26:12 A

CONSTRUCTION DETAIL

Element	Cd	Description
Style	19	RANCH
Model	01	RESIDENTIAL
Grade	C	AVERAGE
Stories	1.00	1 STORY
Foundation	1	CONCRETE
Exterior Wall 1	4	VINYL
Exterior Wall 2		
Roof Structure	1	GABLE
Roof Cover	1	ASPHALT SH
Interior Wall 1	1	DRYWALL
Interior Wall 2		
Interior Floor 1	4	CARPET
Interior Floor 2		
Heat Fuel	1	OIL
Heat Type	1	FORCED H/A
AC Type	03	FULL
Bedrooms	4	
Full Baths	3	
Half Baths	0	
Extra Fixtures	0	
Total Rooms	7	
Bath Style	A	AVERAGE
Half Bath Style		
Kitchens	1	
Kitchen Style	A	AVERAGE
Extra Kitchens	0	
Extra Kitchen St		
FBM Sqft	1307	
FBM Quality	3	
FIN ATC Sqft		
FIN ATC Quality		
Fireplaces	2	
WS Flues		

CONSTRUCTION DETAIL (CONTINUED)

Element	Cd	Description
Central Vac	1	YES
Basement Floor	12	CONCRETE
Bsmt Garage	2	
Units	1	

MIXED USE

Code	Description	Percentage
101	ONE FAM	100
		0
		0

COST / MARKET VALUATION

Adj Base Rate	130.86
RCN	361,821
Net Other Adj	
Year Built	1960
Effective Year Built	1991
Depreciation Code	GD
Remodel Rating	
Year Remodeled	
Depreciation %	30
Functional Obsol	
External Obsol	
Cost Trend Factor	1
Condition	
% Complete	
Overall % Condition	70
RCNLD	253,300
Dep % Ovr	
Dep Ovr Comment	
Misc Imp Ovr	
Misc Imp Ovr Comment	
Cost to Cure Ovr	
Cost to Cure Ovr Comment	

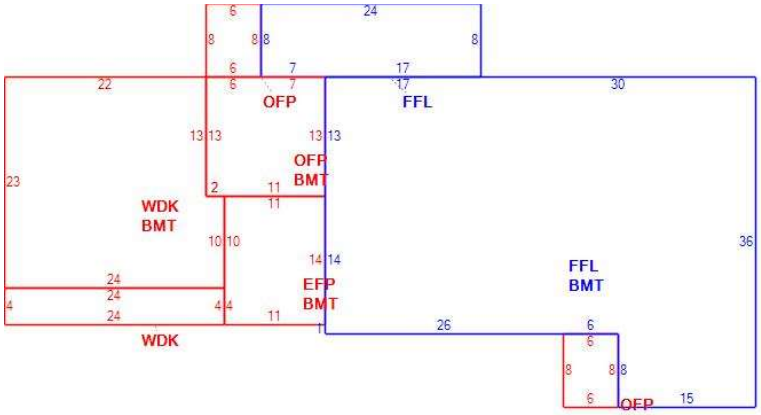

OB - OUTBUILDING & YARD ITEMS(L) / XF - BUILDING EXTRA FEATURES(B)

Code	Description	Su	Sub Type	Lan	Units	Unit Price	Yr Blt	%	Dep.	Cond	Gra	Qual	Apprais Va

BUILDING SUB-AREA SUMMARY SECTION

Subarea	Description	Living	Gross	Eff Area	Unit Cost	Undeprec Value
BMT	BASEMENT	0	2,285		31.29	71,488
EFP	ENCL PORCH	0	154		78.21	12,045
FFL	1ST FLOOR	1,628	1,628		156.43	254,667
OFP	OPEN PORCH	0	265		15.94	4,224
WDK	WOOD DECK	0	622		31.19	19,397
	Ttl Gross Liv / Lease Area	1,628	4,954			361,821