Property Location 152 CANTERBURY CR | Map ID 19/ 54/ 13/ / | Bldg Name | State Use 101
Vision ID 6714 | Account # 6831 | Bldg # 1 | Sec # 1 of 1 | Card # 1 of 1 | Print Date 11/25/2024 7:40:04 A

CURRENT OWNER	TOPO TYPE	UTILITY	STREET	LOCATION
WEBER LAWRENCE J				
WEBER SANDRA J	**TOPO WET**	**EASEMENT**	**TRAFFIC**	**CORNER**
PO BOX 443	**DRAINAGE**		**VIEW**	**COMMUNITY**
EAST LONGMEADOW MA 01028				

SUPPLEMENTAL DATA

Alt Prcl ID	Received
SP Permit	NIA
Chapter Land	Field 8
OC Dates	Field 9
In+Ex FY	Field 10
Mailed	Assoc Pid#

GIS ID F_380286_2845546

CURRENT ASSESSMENT

Description	Code	Appraised	Assessed
RESIDNTL.	101	609700	609,700
RES LAND	101	149700	149,700
Total		759,400	759,400

1006

EAST LONGMEADOW

RECORD OF OWNERSHIP

	BK-VOL/PAGE		SALE DATE	Q/U	V/I	SALE PRICE	VC
WEBER LAWRENCE J	18278	0015	04-30-2010	U	V	92,500	1
DAVIS JOHN + STEPHEN A,	09348	0266	12-27-1995	U	V	745,000	1
ASM + CO INC	00000	0000		U		0	

PREVIOUS ASSESSMENTS (HISTORY)

Year	Code	Assessed	Year	Code	Assessed	Year	Code	Assessed
2024	101	570,200	2023	101	529,700	2022	101	473,700
	101	149,700		101	135,400		101	137,600
	Total	719,900		Total	665,100		Total	611,300

EXEMPTIONS

Year	Code	Description	Amount
		Total	

OTHER ASSESSMENTS

Code	Description	YEAR	Amount	Comm Int

This signature acknowledges a visit by a Data Collector or Assessor

ASSESSING NEIGHBORHOOD

Nbhd	Nbhd Name		Tracing	Batch
0001			101	NV

NOTES

SUB DIV 1029-PHASE XI

APPRAISED VALUE SUMMARY

Appraised BLDG. Value (Card)	609,700
Appraised Xf (B) Value (Bldg)	0
Appraised Ob (B) Value (Bldg)	0
Appraised Land Value (Bldg)	149,700
Special Land Value	0
Total Appraised Parcel Value	759,400
Valuation Method	C
Adjustment	
Net Total Appraised Parcel Value	759,400

BUILDING PERMIT RECORD

Permit Id	Issue Date	Type	Description	Amount	Insp Date	% Comp	Date Comp	Comments
143	05-27-2010	2	DWELLING	600,000				OC 11/3/2010 72` X

VISIT / CHANGE HISTORY

Date	Type	Is	Id	Cd	Purpose/Result
03-15-2018			333	3	MEAS+INSPCTD
11-01-2010			400	25	OC VISIT

LAND LINE VALUATION SECTION

B	Use Co	Description	Zone	D	Fronta	Depth	Land Units		Unit Price	I. Fact	S.A.	Ac Di	C. Fact	St. Idx	Adj	Notes	Special Pricing				Size A	Adj Unit Pric	Land Value
1	101	ONE FAM	RA				27,461	SF	4.36	1.250	9	LAND	1.00	NV	1.00			0			1.000	5.45	149,700
Total Card Land Units							0.63	AC	Parcel Total Land Area:			0.63										Total Land Value	149,700

Property Location 152 CANTERBURY CR | Map ID 19/ 54/ 13/ / | Bldg Name | State Use 101
Vision ID 6714 | Account # 6831 | Bldg # 1 | Sec # 1 of 1 | Card # 1 of 1 | Print Date 11/25/2024 7:40:04 A

CONSTRUCTION DETAIL

Element	Cd	Description
Style	06	COLONIAL
Model	01	RESIDENTIAL
Grade	B+	GOOD (+)
Stories	2.00	2 STORY
Foundation	1	CONCRETE
Exterior Wall 1	4	VINYL
Exterior Wall 2		
Roof Structure	1	GABLE
Roof Cover	1	ASPHALT SH
Interior Wall 1	1	DRYWALL
Interior Wall 2		
Interior Floor 1	3	HARDWOOD
Interior Floor 2	4	CARPET
Heat Fuel	2	GAS
Heat Type	1	FORCED H/A
AC Type	03	FULL
Bedrooms	4	
Full Baths	3	
Half Baths	1	
Extra Fixtures	5	
Total Rooms	9	
Bath Style	V	VERY GOOD
Half Bath Style	G	GOOD
Kitchens	1	
Kitchen Style	G	GOOD
Extra Kitchens	0	
Extra Kitchen St		
FBM Sqft		
FBM Quality		
FIN ATC Sqft		
FIN ATC Quality		
Fireplaces	1	
WS Flues		

CONSTRUCTION DETAIL (CONTINUED)

Element	Cd	Description
Central Vac	0	NO
Basement Floor	12	CONCRETE
Bsmt Garage		
Units	1	

MIXED USE

Code	Description	Percentage
101	ONE FAM	100
		0
		0

COST / MARKET VALUATION

Adj Base Rate	99.64
RCN	662,765
Net Other Adj	
Year Built	2010
Effective Year Built	2013
Depreciation Code	GD
Remodel Rating	
Year Remodeled	
Depreciation %	8
Functional Obsol	
External Obsol	
Cost Trend Factor	1
Condition	
% Complete	
Overall % Condition	92
RCNLD	609,700
Dep % Ovr	
Dep Ovr Comment	
Misc Imp Ovr	
Misc Imp Ovr Comment	
Cost to Cure Ovr	
Cost to Cure Ovr Comment	

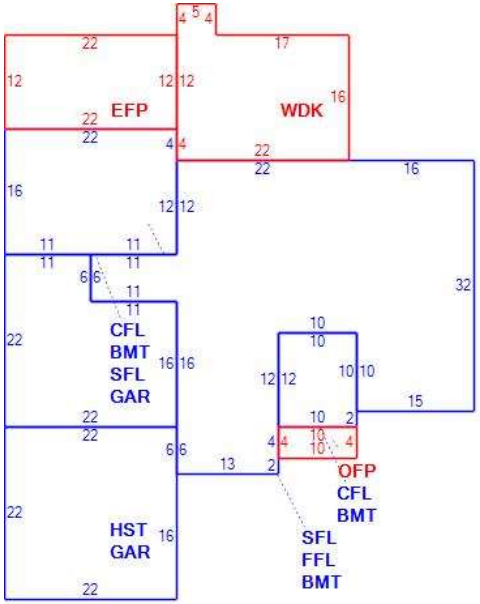

OB - OUTBUILDING & YARD ITEMS(L) / XF - BUILDING EXTRA FEATURES(B)

Code	Description	Su	Sub Type	Lan	Units	Unit Price	Yr Blt	%	Dep.	Cond	Gra	Qual	Apprais Va

BUILDING SUB-AREA SUMMARY SECTION

Subarea	Description	Living	Gross	Eff Area	Unit Cost	Undeprec Value
BMT	BASEMENT	0	1,758		28.59	50,268
CFL	CATHEDRAL CE	472	472		147.04	69,404
EFP	ENCL PORCH	0	264		71.40	18,850
FFL	1ST FLOOR	1,286	1,286		142.81	183,649
GAR	GARAGE	0	902		57.15	51,553
HST	HALF STORY	242	484		71.40	34,559
OFP	OPEN PORCH	0	40		14.28	571
SFL	2ND FLOOR	1,704	1,704		142.81	243,342
WDK	WOOD DECK	0	372		28.41	10,568
	Ttl Gross Liv / Lease Area	3,704	7,282			662,765