Property Location 54 DONAMOR LN | Map ID 16/ 159/ 15/ / | Bldg Name | State Use 101
Vision ID 685 | Account # 707 | Bldg # 1 | Sec # 1 of 1 | Card # 1 of 1 | Print Date 11/18/2024 7:14:29 A

CURRENT OWNER	TOPO TYPE	UTILITY	STREET	LOCATION
MCDONALD FRANCEEN WALKER				
	TOPO WET	EASEMENT	TRAFFIC	CORNER
54 DONAMOR LN				
	DRAINAGE		VIEW	COMMUNITY
EAST LONGMEADOW MA 01028				

SUPPLEMENTAL DATA

Alt Prcl ID	Received
SP Permit	NIA
Chapter Land	Field 8
OC Dates	Field 9
In+Ex FY	Field 10
Mailed	Assoc Pid#

GIS ID F_378860_2850308

CURRENT ASSESSMENT

Description	Code	Appraised	Assessed
RESIDNTL.	101	313800	313,800
RES LAND	101	113100	113,100
RESIDNTL.	101	5400	5,400
Total		432,300	432,300

1006
EAST LONGMEADOW

RECORD OF OWNERSHIP

	BK-VOL/PAGE		SALE DATE	Q/U	V/I	SALE PRICE	VC
MCDONALD FRANCEEN WALKER	21998	0054	12-21-2017	U	I	1	1A
MCDONALD JASON M N	15057	0358	05-31-2005	U	I	300,000	1
SCHWARTZ,MEGAN	13818	0592	12-05-2003	U	I	285,000	
MEYER CHAD P + KARI L,	09648	0455	10-09-1996	U	I	113,000	
POND ROBERT K	03317	0062	02-01-1968	U	I	0	

PREVIOUS ASSESSMENTS (HISTORY)

Year	Code	Assessed	Year	Code	Assessed	Year	Code	Assessed
2024	101	290,300	2023	101	266,900	2022	101	239,700
	101	113,100		101	102,900		101	93,600
	101	5,400		101	4,700		101	4,700
	Total	408,800		Total	374,500		Total	338,000

EXEMPTIONS

Year	Code	Description	Amount
		Total	

OTHER ASSESSMENTS

Code	Description	YEAR	Amount	Comm Int

This signature acknowledges a visit by a Data Collector or Assessor

APPRAISED VALUE SUMMARY

Appraised BLDG. Value (Card)	313,800
Appraised Xf (B) Value (Bldg)	0
Appraised Ob (B) Value (Bldg)	5,400
Appraised Land Value (Bldg)	113,100
Special Land Value	0
Total Appraised Parcel Value	432,300
Valuation Method	C
Adjustment	
Net Total Appraised Parcel Value	432,300

ASSESSING NEIGHBORHOOD

Nbhd	Nbhd Name		Tracing	Batch
0001			101	MA

NOTES

BUILDING PERMIT RECORD

Permit Id	Issue Date	Type	Description	Amount	Insp Date	% Comp	Date Comp	Comments
201601167	04-07-2016	91	INSULATION	1,600		0		
201303064	11-19-2013	25	WINDOWS	3,000	04-23-2014	100	04-23-2014	
341	12-18-2002	4	ADDITION	20,000				REHAB ROOM OC
207	08-09-2001	4	ADDITION	15,000				FAMILY RM W/CAT

VISIT / CHANGE HISTORY

Date	Type	Is	Id	Cd	Purpose/Result
04-23-2014			105	15	PERMIT VISIT
04-01-2004			250	22	MAILER SENT
02-26-2004			311	2	MEASURED
02-02-2004			296	15	PERMIT VISIT
03-11-2003			274	15	PERMIT VISIT
01-14-2003			274	15	PERMIT VISIT
02-07-2002			274	15	PERMIT VISIT

LAND LINE VALUATION SECTION

B	Use Co	Description	Zone	D	Fronta	Depth	Land Units		Unit Price	I. Fact	S.A.	Ac Di	C. Fact	St. Idx	Adj	Notes	Special Pricing				Size A	Adj Unit Pric	Land Value
1	101	ONE FAM	RC				14,827	SF	7.63	1.000	5	LAND	1.00	MA	1.00			0			1.000	7.63	113,100
Total Card Land Units							0.34	AC	Parcel Total Land Area:			0.34										Total Land Value	113,100

Property Location 54 DONAMOR LN | Map ID 16/ 159/ 15/ / | Bldg Name | State Use 101
Vision ID 685 | Account # 707 | Bldg # 1 | Sec # 1 of 1 | Card # 1 of 1 | Print Date 11/18/2024 7:14:30 A

CONSTRUCTION DETAIL

Element	Cd	Description
Style	05	CAPE
Model	01	RESIDENTIAL
Grade	C	AVERAGE
Stories	1.50	1 1/2 STORIES
Foundation	1	CONCRETE
Exterior Wall 1	4	VINYL
Exterior Wall 2		
Roof Structure	1	GABLE
Roof Cover	1	ASPHALT SH
Interior Wall 1	1	DRYWALL
Interior Wall 2		
Interior Floor 1	4	CARPET
Interior Floor 2	3	HARDWOOD
Heat Fuel	2	GAS
Heat Type	1	FORCED H/A
AC Type	03	FULL
Bedrooms	4	
Full Baths	2	
Half Baths	0	
Extra Fixtures	1	
Total Rooms	8	
Bath Style	A	AVERAGE
Half Bath Style		
Kitchens	1	
Kitchen Style	A	AVERAGE
Extra Kitchens	0	
Extra Kitchen St		
FBM Sqft	941	
FBM Quality	3	
FIN ATC Sqft		
FIN ATC Quality		
Fireplaces	1	
WS Flues		

CONSTRUCTION DETAIL (CONTINUED)

Element	Cd	Description
Central Vac	0	NO
Basement Floor		
Bsmt Garage		
Units	1	

MIXED USE

Code	Description	Percentage
101	ONE FAM	100
		0
		0

COST / MARKET VALUATION

Adj Base Rate	125.99
RCN	378,079
Net Other Adj	
Year Built	1968
Effective Year Built	2004
Depreciation Code	VG
Remodel Rating	
Year Remodeled	
Depreciation %	17
Functional Obsol	
External Obsol	
Cost Trend Factor	1
Condition	
% Complete	
Overall % Condition	83
RCNLD	313,800
Dep % Ovr	
Dep Ovr Comment	
Misc Imp Ovr	
Misc Imp Ovr Comment	
Cost to Cure Ovr	
Cost to Cure Ovr Comment	

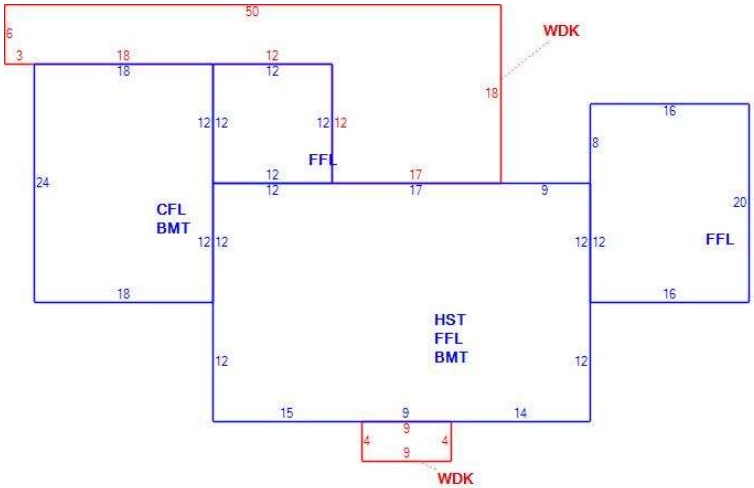

OB - OUTBUILDING & YARD ITEMS(L) / XF - BUILDING EXTRA FEATURES(B)

Code	Description	Su	Sub Type	Lan	Units	Unit Price	Yr Blt	%	Dep.	Cond	Gra	Qual	Apprais Va
03	GARAGE	OB	Outbuildi	L	280	32.00	1954	60	0.00	AV	A	1.00	5,400

BUILDING SUB-AREA SUMMARY SECTION

Subarea	Description	Living	Gross	Eff Area	Unit Cost	Undeprec Value
BMT	BASEMENT	0	1,344		28.51	38,321
CFL	CATHEDRAL CE	432	432		146.74	63,393
FFL	1ST FLOOR	1,376	1,376		142.46	196,020
HST	HALF STORY	456	912		71.23	64,960
WDK	WOOD DECK	0	540		28.49	15,385
	Ttl Gross Liv / Lease Area	2,264	4,604			378,079