Property Location 60 EUCLID AV | Map ID 2C/ 36/ 424A/ / | Bldg Name | State Use 101
Vision ID 7638 | Account # 7638 | Bldg # 1 | Sec # 1 of 1 | Card # 1 of 1 | Print Date 11/25/2024 8:24:39 A

CURRENT OWNER	TOPO TYPE	UTILITY	STREET	LOCATION
HUSSAIN SYED I				
JAFFREY MASOOMA Z	TOPO WET	EASEMENT	TRAFFIC	CORNER
60 EUCLID AV	DRAINAGE		VIEW	COMMUNITY
EAST LONGMEADOW MA 01028				

GIS ID F_375504_2854725

SUPPLEMENTAL DATA

Alt Prcl ID		Received	
SP Permit		NIA	
Chapter Land		Field 8	
OC Dates	3/31/22	Field 9	
In+Ex FY		Field 10	
Mailed		Assoc Pid#	

CURRENT ASSESSMENT

Description	Code	Appraised	Assessed
RESIDNTL.	101	367100	367,100
RES LAND	101	83000	83,000
Total		450,100	450,100

1006

EAST LONGMEADOW

RECORD OF OWNERSHIP

	BK-VOL/PAGE		SALE DATE	Q/U	V/I	SALE PRICE	VC
HUSSAIN SYED I	24511	0446	04-22-2022	Q	I	436,000	00
MOLTENBREY BUILDERS LLC	23303	0368	07-09-2020	U	V	100,000	1V
BARTON RYAN M	20800	0038	07-24-2015	U	V	140,000	1

PREVIOUS ASSESSMENTS (HISTORY)

Year	Code	Assessed	Year	Code	Assessed	Year	Code	Assessed
2024	101	343,300	2023	101	315,800	2022	130	68,600
	101	83,000		101	75,500		130	25,000
	Total	426,300		Total	391,300		Total	93,600

EXEMPTIONS

Year	Code	Description	Amount
		Total	

OTHER ASSESSMENTS

Code	Description	YEAR	Amount	Comm Int

This signature acknowledges a visit by a Data Collector or Assessor

ASSESSING NEIGHBORHOOD

Nbhd	Nbhd Name		Tracing	Batch
0001				

NOTES

NEW FOR FY22 FROM 2C-36-424. NO PLAN

INCLUDES LOTS 421, 422, 423

APPRAISED VALUE SUMMARY

Appraised BLDG. Value (Card)	367,100
Appraised Xf (B) Value (Bldg)	0
Appraised Ob (B) Value (Bldg)	0
Appraised Land Value (Bldg)	83,000
Special Land Value	0
Total Appraised Parcel Value	450,100
Valuation Method	C
Adjustment	
Net Total Appraised Parcel Value	450,100

BUILDING PERMIT RECORD

Permit Id	Issue Date	Type	Description	Amount	Insp Date	% Comp	Date Comp	Comments
202101271	04-13-2021	2	DWELLING	295,000	03-31-2022	100	03-31-2022	NEW SINGLE FAMIL

VISIT / CHANGE HISTORY

Date	Type	Is	Id	Cd	Purpose/Result
03-31-2022	01		400	25	OC VISIT
06-30-2021			334	15	PERMIT VISIT

LAND LINE VALUATION SECTION

B	Use Co	Description	Zone	D	Fronta	Depth	Land Units		Unit Price	I. Fact	S.A.	Ac Di	C. Fact	St. Idx	Adj	Notes	Special Pricing				Size A	Adj Unit Pric	Land Value
1	101	ONE FAM	RC				6,750	SF	16.19	0.760	3	LAND	1.00	MF	1.00			0			1.000	12.3	83,000
						Total Card Land Units	0.15	AC	Parcel Total Land Area:			0.15										Total Land Value	83,000

Property Location 60 EUCLID AV | Map ID 2C/ 36/ 424A/ / | Bldg Name | State Use 101
Vision ID 7638 | Account # 7638 | Bldg # 1 | Sec # 1 of 1 | Card # 1 of 1 | Print Date 11/25/2024 8:24:39 A

CONSTRUCTION DETAIL

Element	Cd	Description
Style	19	RANCH
Model	01	RESIDENTIAL
Grade	B	GOOD
Stories	1.00	1 STORY
Foundation	1	CONCRETE
Exterior Wall 1	4	VINYL
Exterior Wall 2		
Roof Structure	1	GABLE
Roof Cover	1	ASPHALT SH
Interior Wall 1	1	DRYWALL
Interior Wall 2		
Interior Floor 1	3	HARDWOOD
Interior Floor 2	4	CARPET
Heat Fuel	2	GAS
Heat Type	1	FORCED H/A
AC Type	03	FULL
Bedrooms	3	
Full Baths	2	
Half Baths	0	
Extra Fixtures	0	
Total Rooms	5	
Bath Style	G	GOOD
Half Bath Style	N	NONE
Kitchens	1	
Kitchen Style	G	GOOD
Extra Kitchens	0	
Extra Kitchen St	N	NONE
FBM Sqft	348	
FBM Quality	5	
FIN ATC Sqft		
FIN ATC Quality		
Fireplaces	1	
WS Flues	0	

CONSTRUCTION DETAIL (CONTINUED)

Element	Cd	Description
Central Vac	0	NO
Basement Floor	12	CONCRETE
Bsmt Garage	0	
Units	1	

MIXED USE

Code	Description	Percentage
101	ONE FAM	100
		0
		0

COST / MARKET VALUATION

Adj Base Rate	138.80
RCN	370,798
Net Other Adj	
Year Built	2022
Effective Year Built	2020
Depreciation Code	GD
Remodel Rating	
Year Remodeled	
Depreciation %	1
Functional Obsol	
External Obsol	
Cost Trend Factor	1
Condition	
% Complete	
Overall % Condition	99
RCNLD	367,100
Dep % Ovr	
Dep Ovr Comment	
Misc Imp Ovr	
Misc Imp Ovr Comment	
Cost to Cure Ovr	
Cost to Cure Ovr Comment	

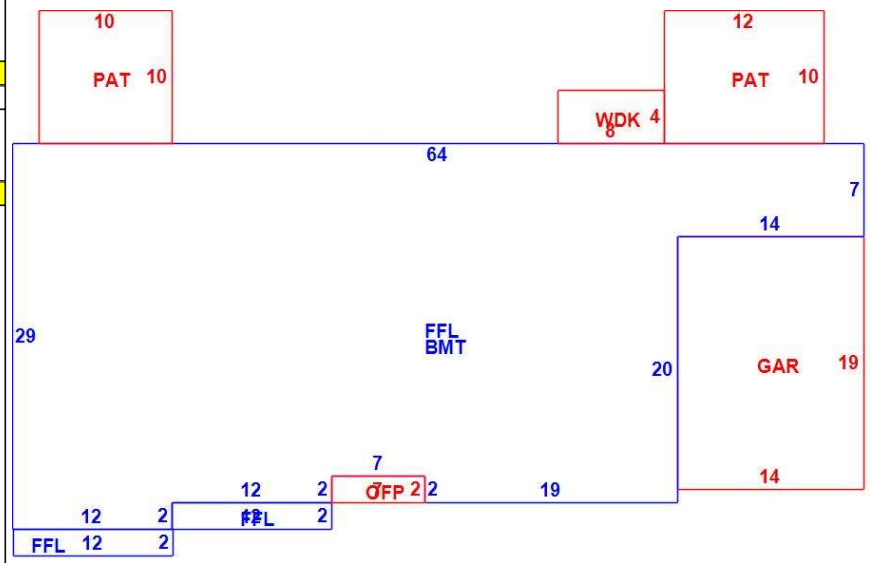

OB - OUTBUILDING & YARD ITEMS(L) / XF - BUILDING EXTRA FEATURES(B)

Code	Description	Su	Sub Type	Lan	Units	Unit Price	Yr Blt	%	Dep.	Cond	Gra	Qual	Apprais Va

BUILDING SUB-AREA SUMMARY SECTION

Subarea	Description	Living	Gross	Eff Area	Unit Cost	Undeprec Value
BMT	BASEMENT	0	1,458		38.64	56,334
FFL	1ST FLOOR	1,506	1,506		192.92	290,542
GAR	GARAGE	0	266		76.88	20,450
OFP	OPEN PORCH	0	14		13.78	193
PAT	PATIO	0	220		9.65	2,122
WDK	WOOD DECK	0	32		36.17	1,158
	Ttl Gross Liv / Lease Area	1,506	3,496			370,798