Property Location 39 WESTERNVIEW CR | Map ID 28/ 63/ 24/ / | Bldg Name | State Use 101
Vision ID 2140 | Account # 2177 | Bldg # 1 | Sec # 1 of 1 | Card # 1 of 1 | Print Date 11/19/2025 12:30:50

CURRENT OWNER	TOPO TYPE	UTILITY	STREET	LOCATION
SZOKA ANTHONY G III				
SZOKA PATRICIA E	**TOPO WET**	**EASEMENT**	**TRAFFIC**	**CORNER**
52 DONAMOR LN				
	DRAINAGE		**VIEW**	**COMMUNITY**
EAST LONGMEADOW MA 01028				

SUPPLEMENTAL DATA

Alt Prcl ID	Received
SP Permit HO:HO	NIA
Chapter Land	Field 8
OC Dates	Field 9
In+Ex FY	Field 10
Mailed	Assoc Pid#

GIS ID F_381817_2847861

CURRENT ASSESSMENT

Description	Code	Appraised	Assessed
RESIDNTL.	101	225500	225,500
RES LAND	101	125000	125,000
RESIDNTL.	101	600	600
Total		351,100	351,100

1006

EAST LONGMEADOW

RECORD OF OWNERSHIP

	BK-VOL/PAGE		SALE DATE	Q/U	V/I	SALE PRICE	VC
SZOKA ANTHONY G III	19597	0469	12-17-2012	U	I	100	1A
SZOKA ANN M LIFE ESTATE,	15944	0583	06-01-2006	U	I	100	1A
SZOKA ANN M,	11205	0582	05-25-2000	U	I	137,000	
DENTZAU,ROBYN J &	10371	0217	07-17-1999	U	I	139,900	
CZAPLICKI,LAUREN J TRUSTEE OF	10280	0423	05-12-1998	U	I	65,000	1S

PREVIOUS ASSESSMENTS (HISTORY)

Year	Code	Assessed	Year	Code	Assessed	Year	Code	Assessed
2025	101	204,600	2024	101	188,900	2023	101	173,200
	101	125,000		101	125,000		101	113,800
	101	600		101	600		101	400
	Total	330,200		Total	314,500		Total	287,400

EXEMPTIONS

Year	Code	Description	Amount
		Total	

OTHER ASSESSMENTS

Code	Description	YEAR	Amount	Comm Int

This signature acknowledges a visit by a Data Collector or Assessor

ASSESSING NEIGHBORHOOD

Nbhd	Nbhd Name		Tracing	Batch
0001			101	MA

NOTES

APPRAISED VALUE SUMMARY

Appraised BLDG. Value (Card)	225,500
Appraised Xf (B) Value (Bldg)	0
Appraised Ob (B) Value (Bldg)	600
Appraised Land Value (Bldg)	125,000
Special Land Value	0
Total Appraised Parcel Value	351,100
Valuation Method	C
Adjustment	
Net Total Appraised Parcel Value	351,100

BUILDING PERMIT RECORD

Permit Id	Issue Date	Type	Description	Amount	Insp Date	% Comp	Date Comp	Comments
201601619	05-10-2016	4	ADDITION	32,645	04-27-2017	100	04-27-2017	16X18 OFF REAR
78	05-14-1998	7	REMODEL	25,000				KIT CAB/BATH/WIN/
29	03-01-1992	MN	Manual Note	20,000				ADDITION

VISIT / CHANGE HISTORY

Date	Type	Is	Id	Cd	Purpose/Result
04-27-2017			317	15	PERMIT VISIT
01-08-2016			317	2	MEASURED
09-20-2003			274	3	MEAS+INSPCTD
02-10-1999			247	15	PERMIT VISIT
01-16-1998			181	15	PERMIT VISIT
12-19-1996			200	15	PERMIT VISIT
12-18-1995			107	15	PERMIT VISIT

LAND LINE VALUATION SECTION

B	Use Co	Description	Zone	D	Fronta	Depth	Land Units		Unit Price	I. Fact	S.A.	Ac Di	C. Fact	St. Idx	Adj	Notes	Special Pricing				Size A	Adj Unit Pric	Land Value
1	101	ONE FAM	RA				40,000	SF	3.12	1.000	5	LAND	1.00	MA	1.00			0			1.000	3.12	124,800
1	101	ONE FAM	RA				0.030	AC	7,000.00	1.000	0		1.00	MA	1.00			0			1.000	7,000	200
						Total Card Land Units	0.95	AC	Parcel Total Land Area:			0.95										Total Land Value	125,000

Property Location 39 WESTERNVIEW CR | Map ID 28/ 63/ 24/ / | Bldg Name | State Use 101
Vision ID 2140 | Account # 2177 | Bldg # 1 | Sec # 1 of 1 | Card # 1 of 1 | Print Date 11/19/2025 12:30:51

CONSTRUCTION DETAIL

Element	Cd	Description
Style	19	RANCH
Model	01	RESIDENTIAL
Grade	C	AVERAGE
Stories	1.00	1 STORY
Foundation	6	SLAB
Exterior Wall 1	1	WOOD SHING
Exterior Wall 2	8	BRICK VENR
Roof Structure	1	GABLE
Roof Cover	1	ASPHALT SH
Interior Wall 1	1	DRYWALL
Interior Wall 2		
Interior Floor 1	4	CARPET
Interior Floor 2		
Heat Fuel	2	GAS
Heat Type	1	FORCED H/A
AC Type	03	FULL
Bedrooms	3	
Full Baths	1	
Half Baths	0	
Extra Fixtures	1	
Total Rooms	5	
Bath Style	G	GOOD
Half Bath Style		
Kitchens	1	
Kitchen Style	G	GOOD
Extra Kitchens	0	
Extra Kitchen St		
FBM Sqft		
FBM Quality		
FIN ATC Sqft		
FIN ATC Quality		
Fireplaces	1	
WS Flues		

CONSTRUCTION DETAIL (CONTINUED)

Element	Cd	Description
Central Vac	0	NO
Basement Floor		
Bsmt Garage		
Units	1	

MIXED USE

Code	Description	Percentage
101	ONE FAM	100
		0
		0

COST / MARKET VALUATION

Adj Base Rate	154.82
RCN	322,194
Net Other Adj	
Year Built	1950
Effective Year Built	1995
Depreciation Code	GD
Remodel Rating	
Year Remodeled	
Depreciation %	30
Functional Obsol	
External Obsol	
Cost Trend Factor	1
Condition	
% Complete	
Overall % Condition	70
RCNLD	225,500
Dep % Ovr	
Dep Ovr Comment	
Misc Imp Ovr	
Misc Imp Ovr Comment	
Cost to Cure Ovr	
Cost to Cure Ovr Comment	

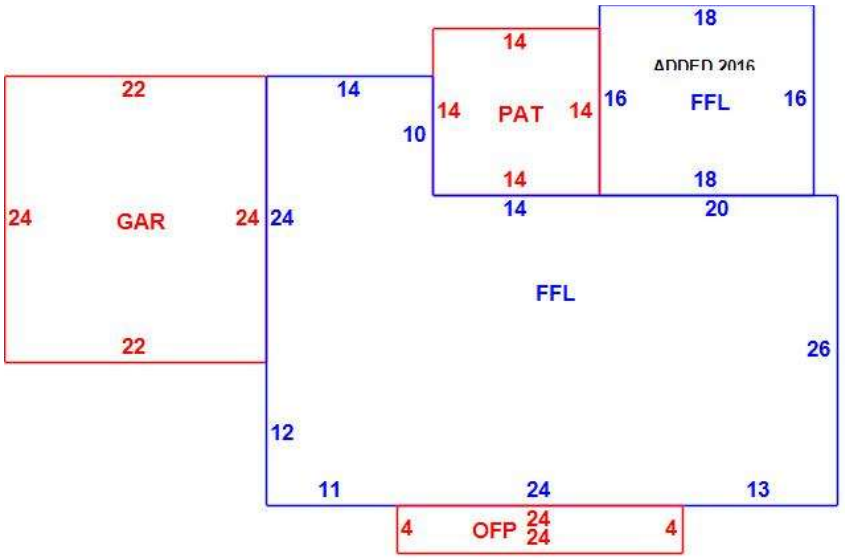

OB - OUTBUILDING & YARD ITEMS(L) / XF - BUILDING EXTRA FEATURES(B)

Code	Description	Su	Sub Type	Lan	Units	Unit Price	Yr Blt	%	Dep.	Cond	Gra	Qual	Apprais Va
02	SHED/FR			L	80	12.00	1975	60	0.00	AV	A	1.00	600

BUILDING SUB-AREA SUMMARY SECTION

Subarea	Description	Living	Gross	Eff Area	Unit Cost	Undeprec Value
FFL	1ST FLOOR	1,676	1,676		168.95	283,166
GAR	GARAGE	0	528		67.52	35,649
OFP	OPEN PORCH	0	96		17.60	1,690
PAT	PATIO	0	196		8.62	1,690
	Ttl Gross Liv / Lease Area	1,676	2,496			322,194