Property Location 35 WESTERNVIEW CR | Map ID 28/ 64/ 1/ / | Bldg Name | State Use 101
Vision ID 2141 | Account # 2178 | Bldg # 1 | Sec # 1 of 1 | Card # 1 of 1 | Print Date 11/19/2025 12:30:58

| CURRENT OWNER | TOPO TYPE | UTILITY | STREET | LOCATION |
|---|---|---|---|---|
| FAMIGLIETTI ANDREW JOSEPH | | | | |
| FAMIGLIETTI KELSEY M | **TOPO WET** | **EASEMENT** | **TRAFFIC** | **CORNER** |
| 35 WESTERNVIEW CR | | | | |
| | **DRAINAGE** | | **VIEW** | **COMMUNITY** |
| EAST LONGMEADOW MA 01028 | | | | |

GIS ID F_381767_2848031

**SUPPLEMENTAL DATA**

| | |
|---|---|
| Alt Prcl ID | Received |
| SP Permit | NIA |
| Chapter Land | Field 8 |
| OC Dates | Field 9 |
| In+Ex FY | Field 10 |
| Mailed | Assoc Pid# |

**CURRENT ASSESSMENT**

| Description | Code | Appraised | Assessed |
|---|---|---|---|
| RESIDNTL. | 101 | 286200 | 286,200 |
| RES LAND | 101 | 115800 | 115,800 |
| Total | | 402,000 | 402,000 |

1006

EAST LONGMEADOW

**RECORD OF OWNERSHIP**

| | BK-VOL/PAGE | | SALE DATE | Q/U | V/I | SALE PRICE | VC |
|---|---|---|---|---|---|---|---|
| FAMIGLIETTI ANDREW JOSEPH | 24925 | 0492 | 03-02-2023 | Q | I | 380,000 | 00 |
| MILLS APRIL S | 23788 | 0123 | 03-26-2021 | Q | I | 339,000 | 00 |
| SAAVEDRA ISABEL | 21167 | 0175 | 05-06-2016 | U | I | 1 | 1A |
| SAAVEDRA ISABEL | 18125 | 0399 | 12-09-2009 | U | I | 251,750 | |
| MYERS,MICHAEL E | 15444 | 0452 | 10-27-2005 | U | I | 235,000 | |

**PREVIOUS ASSESSMENTS (HISTORY)**

| Year | Code | Assessed | Year | Code | Assessed | Year | Code | Assessed |
|---|---|---|---|---|---|---|---|---|
| 2025 | 101 | 259,700 | 2024 | 101 | 239,800 | 2023 | 101 | 218,100 |
| | 101 | 115,800 | | 101 | 115,800 | | 101 | 105,300 |
| | Total | 375,500 | | Total | 355,600 | | Total | 323,400 |

**EXEMPTIONS**

| Year | Code | Description | Amount |
|---|---|---|---|
| | | | |
| | | Total | |

**OTHER ASSESSMENTS**

| Code | Description | YEAR | Amount | Comm Int |
|---|---|---|---|---|
| | | | | |

This signature acknowledges a visit by a Data Collector or Assessor

**ASSESSING NEIGHBORHOOD**

| Nbhd | Nbhd Name | | Tracing | Batch |
|---|---|---|---|---|
| 0001 | | | 101 | MA |

**NOTES**

**APPRAISED VALUE SUMMARY**

| | |
|---|---|
| Appraised BLDG. Value (Card) | 286,200 |
| Appraised Xf (B) Value (Bldg) | 0 |
| Appraised Ob (B) Value (Bldg) | 0 |
| Appraised Land Value (Bldg) | 115,800 |
| Special Land Value | 0 |
| Total Appraised Parcel Value | 402,000 |
| Valuation Method | C |
| Adjustment | |
| Net Total Appraised Parcel Value | 402,000 |

**BUILDING PERMIT RECORD**

| Permit Id | Issue Date | Type | Description | Amount | Insp Date | % Comp | Date Comp | Comments |
|---|---|---|---|---|---|---|---|---|
| 202002642 | 09-28-2020 | 91 | INSULATION | 6,163 | | 0 | | |
| 202001639 | 05-20-2020 | 25 | WINDOWS | 4,676 | 07-07-2020 | 100 | 07-07-2020 | 7 REPLACEMENT |
| 201602745 | 10-27-2016 | 25 | WINDOWS | 4,375 | 03-21-2017 | 100 | 03-21-2017 | REPLACE 7 NVC |
| 201502136 | 07-14-2015 | 25 | WINDOWS | 6,045 | 05-13-2016 | 100 | 05-13-2016 | |

**VISIT / CHANGE HISTORY**

| Date | Type | Is | Id | Cd | Purpose/Result |
|---|---|---|---|---|---|
| 02-08-2021 | | | 400 | 16 | FIELDREV CHG |
| 07-07-2020 | | | 400 | 15 | PERMIT VISIT |
| 03-21-2017 | | | 317 | 15 | PERMIT VISIT |
| 05-13-2016 | | | 317 | 15 | PERMIT VISIT |
| 02-10-2010 | | | 317 | 16 | FIELDREV CHG |
| 06-09-2004 | | | 303 | 2 | MEASURED |
| 08-01-1980 | | | 500 | 3 | MEAS+INSPCTD |

**LAND LINE VALUATION SECTION**

| B | Use Co | Description | Zone | D | Fronta | Depth | Land Units | | Unit Price | I. Fact | S.A. | Ac Di | C. Fact | St. Idx | Adj | Notes | Special Pricing | | | | Size A | Adj Unit Pric | Land Value |
|---|---|---|---|---|---|---|---|---|---|---|---|---|---|---|---|---|---|---|---|---|---|---|---|
| 1 | 101 | ONE FAM | RA | | | | 20,217 | SF | 5.73 | 1.000 | 5 | LAND | 1.00 | MA | 1.00 | | | 0 | | | 1.000 | 5.73 | 115,800 |
| | | | | | | Total Card Land Units | 0.46 | AC | Parcel Total Land Area: | 0.46 | | | | | | | | | | | | Total Land Value | 115,800 |

Property Location 35 WESTERNVIEW CR | Map ID 28/ 64/ 1/ / | Bldg Name | State Use 101
Vision ID 2141 | Account # 2178 | Bldg # 1 | Sec # 1 of 1 | Card # 1 of 1 | Print Date 11/19/2025 12:30:58

## CONSTRUCTION DETAIL

| Element | Cd | Description |
|---|---|---|
| Style | 05 | CAPE |
| Model | 01 | RESIDENTIAL |
| Grade | C | AVERAGE |
| Stories | 1.75 | 1 3/4 STORIES |
| Foundation | 1 | CONCRETE |
| Exterior Wall 1 | 7 | BRICK |
| Exterior Wall 2 | 4 | VINYL |
| Roof Structure | 1 | GABLE |
| Roof Cover | 1 | ASPHALT SH |
| Interior Wall 1 | 1 | DRYWALL |
| Interior Wall 2 | 4 | SOLID WOOD |
| Interior Floor 1 | 4 | CARPET |
| Interior Floor 2 | 3 | HARDWOOD |
| Heat Fuel | 2 | GAS |
| Heat Type | 1 | FORCED H/A |
| AC Type | 03 | FULL |
| Bedrooms | 4 | |
| Full Baths | 2 | |
| Half Baths | 0 | |
| Extra Fixtures | 1 | |
| Total Rooms | 6 | |
| Bath Style | G | GOOD |
| Half Bath Style | | |
| Kitchens | 1 | |
| Kitchen Style | G | GOOD |
| Extra Kitchens | 0 | |
| Extra Kitchen St | | |
| FBM Sqft | | |
| FBM Quality | | |
| FIN ATC Sqft | | |
| FIN ATC Quality | | |
| Fireplaces | 1 | |
| WS Flues | | |

## CONSTRUCTION DETAIL (CONTINUED)

| Element | Cd | Description |
|---|---|---|
| Central Vac | 0 | NO |
| Basement Floor | 12 | CONCRETE |
| Bsmt Garage | | |
| Units | 1 | |

## MIXED USE

| Code | Description | Percentage |
|---|---|---|
| 101 | ONE FAM | 100 |
| | | 0 |
| | | 0 |

## COST / MARKET VALUATION

| | |
|---|---|
| Adj Base Rate | 139.86 |
| RCN | 408,901 |
| Net Other Adj | |
| Year Built | 1950 |
| Effective Year Built | 1995 |
| Depreciation Code | GD |
| Remodel Rating | |
| Year Remodeled | |
| Depreciation % | 30 |
| Functional Obsol | |
| External Obsol | |
| Cost Trend Factor | 1 |
| Condition | |
| % Complete | |
| Overall % Condition | 70 |
| RCNLD | 286,200 |
| Dep % Ovr | |
| Dep Ovr Comment | |
| Misc Imp Ovr | |
| Misc Imp Ovr Comment | |
| Cost to Cure Ovr | |
| Cost to Cure Ovr Comment | |

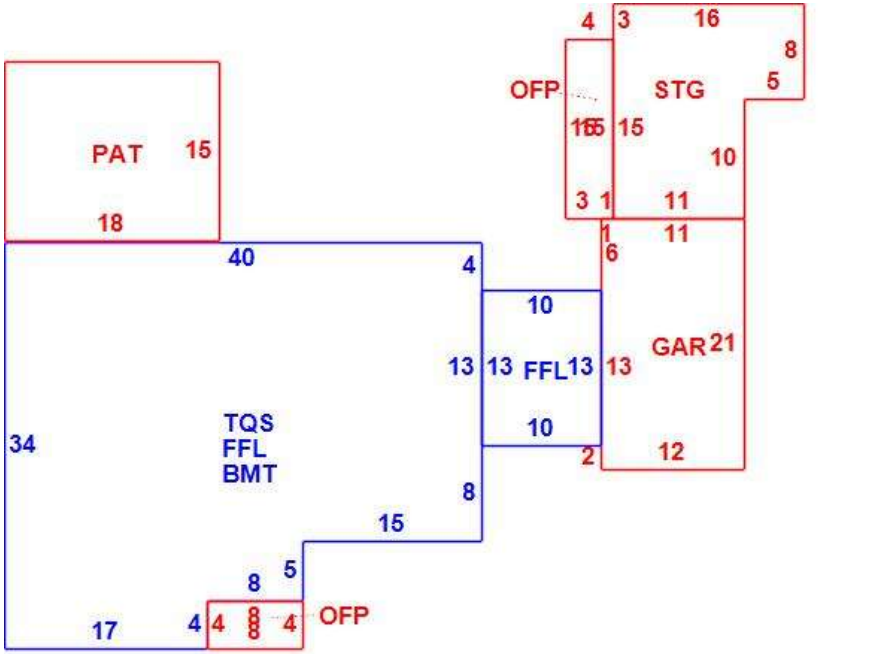

## OB - OUTBUILDING & YARD ITEMS(L) / XF - BUILDING EXTRA FEATURES(B)

| Code | Description | Su | Sub Type | Lan | Units | Unit Price | Yr Blt | % | Dep. | Cond | Gra | Qual | Apprais Va |
|---|---|---|---|---|---|---|---|---|---|---|---|---|---|

## BUILDING SUB-AREA SUMMARY SECTION

| Subarea | Description | Living | Gross | Eff Area | Unit Cost | Undeprec Value |
|---|---|---|---|---|---|---|
| BMT | BASEMENT | 0 | 1,193 | | 30.61 | 36,520 |
| FFL | 1ST FLOOR | 1,323 | 1,323 | | 152.80 | 202,159 |
| GAR | GARAGE | 0 | 252 | | 61.24 | 15,433 |
| OFP | OPEN PORCH | 0 | 92 | | 14.95 | 1,375 |
| PAT | PATIO | 0 | 270 | | 7.92 | 2,139 |
| STG | STORAGE | 0 | 238 | | 60.99 | 14,516 |
| TQS | 3/4 STORY | 895 | 1,193 | | 114.63 | 136,759 |
| | Ttl Gross Liv / Lease Area | 2,218 | 4,561 | | | 408,901 |