Property Location 185 GATES AV | Map ID 12B/ 9/ 141/ / | Bldg Name | State Use 101
Vision ID 215 | Account # 219 | Bldg # 1 | Sec # 1 of 1 | Card # 1 of 1 | Print Date 11/17/2025 8:43:54 A

CURRENT OWNER	TOPO TYPE	UTILITY	STREET	LOCATION
HEWINSON DAVID L				
	TOPO WET	EASEMENT	TRAFFIC	CORNER
185 GATES AV				
	DRAINAGE		VIEW	COMMUNITY
EAST LONGMEADOW MA 01028				

GIS ID F_379050_2856870

SUPPLEMENTAL DATA

Alt Prcl ID	Received
SP Permit	NIA
Chapter Land	Field 8
OC Dates	Field 9
In+Ex FY	Field 10
Mailed	Assoc Pid#

CURRENT ASSESSMENT

Description	Code	Appraised	Assessed
RESIDNTL.	101	267400	267,400
RES LAND	101	110800	110,800
Total		378,200	378,200

1006

EAST LONGMEADOW

RECORD OF OWNERSHIP

	BK-VOL/PAGE		SALE DATE	Q/U	V/I	SALE PRICE	VC
HEWINSON DAVID L	23883	0194	05-14-2021	U	I	100	1A
HEWINSON CECILE	16528	0331	02-23-2007	U	I	250,000	
DOMANTOVSKY,ALEKSANDER	13371	0312	07-08-2003	U	I	100	1A
DOMANTOVSKY ALEKSANDER,	09834	0345	04-23-1997	U	I	1	1A
DOMANTOVSKY ALEKSANDER +	08517	0009	08-05-1993	U	I	114,000	

PREVIOUS ASSESSMENTS (HISTORY)

Year	Code	Assessed	Year	Code	Assessed	Year	Code	Assessed
2025	101	244,200	2024	101	226,800	2023	101	209,500
	101	110,800		101	110,800		101	100,700
	Total	355,000		Total	337,600		Total	310,200

EXEMPTIONS

Year	Code	Description	Amount
		Total	

OTHER ASSESSMENTS

Code	Description	YEAR	Amount	Comm Int

This signature acknowledges a visit by a Data Collector or Assessor

ASSESSING NEIGHBORHOOD

Nbhd	Nbhd Name		Tracing	Batch
0001			101	MA

NOTES

APPRAISED VALUE SUMMARY

Appraised BLDG. Value (Card)	267,400
Appraised Xf (B) Value (Bldg)	0
Appraised Ob (B) Value (Bldg)	0
Appraised Land Value (Bldg)	110,800
Special Land Value	0
Total Appraised Parcel Value	378,200
Valuation Method	C
Adjustment	
Net Total Appraised Parcel Value	378,200

BUILDING PERMIT RECORD

Permit Id	Issue Date	Type	Description	Amount	Insp Date	% Comp	Date Comp	Comments
B-24-712	10-30-2024	62	SOLAR	64,569	06-02-2025	100	06-02-2025	24 PANELS
201102789	10-18-2011	25	WINDOWS	3,700				2 REPLACEMENT
329	10-13-2010	4	ADDITION	40,000				14X16 INCLUDES B
231	08-01-1993	MN	Manual Note	1,000				BATH BASE
229	08-01-1993	MN	Manual Note	200				WOODSTOVE

VISIT / CHANGE HISTORY

Date	Type	Is	Id	Cd	Purpose/Result
06-02-2025			450	15	PERMIT VISIT
07-16-2019		1	334	3	MEAS+INSPCTD
04-06-2012			317	15	PERMIT VISIT
03-30-2012			317	14	INSPECTED
03-28-2012			250	22	MAILER SENT
02-10-2012			317	15	PERMIT VISIT
02-10-2012			317	15	PERMIT VISIT

LAND LINE VALUATION SECTION

B	Use Co	Description	Zone	D	Fronta	Depth	Land Units		Unit Price	I. Fact	S.A.	Ac Di	C. Fact	St. Idx	Adj	Notes	Special Pricing				Size A	Adj Unit Pric	Land Value
1	101	ONE FAM	RC				10,000	SF	11.08	1.000	5	LAND	1.00	MA	1.00			0			1.000	11.08	110,800
						Total Card Land Units	0.23	AC	Parcel Total Land Area:	0.23												Total Land Value	110,800

Property Location 185 GATES AV | Map ID 12B/ 9/ 141/ / | Bldg Name | State Use 101
Vision ID 215 | Account # 219 | Bldg # 1 | Sec # 1 of 1 | Card # 1 of 1 | Print Date 11/17/2025 8:43:54 A

CONSTRUCTION DETAIL

Element	Cd	Description
Style	19	RANCH
Model	01	RESIDENTIAL
Grade	C+	AVG. (+)
Stories	1.00	1 STORY
Foundation	1	CONCRETE
Exterior Wall 1	1	WOOD SHING
Exterior Wall 2	16	STONE VENR
Roof Structure	1	GABLE
Roof Cover	1	ASPHALT SH
Interior Wall 1	1	DRYWALL
Interior Wall 2		
Interior Floor 1	3	HARDWOOD
Interior Floor 2		
Heat Fuel	2	GAS
Heat Type	3	FORCED H/W
AC Type	01	NONE
Bedrooms	3	
Full Baths	2	
Half Baths	2	
Extra Fixtures	1	
Total Rooms	7	
Bath Style	A	AVERAGE
Half Bath Style	A	AVERAGE
Kitchens	1	
Kitchen Style	G	GOOD
Extra Kitchens	0	
Extra Kitchen St		
FBM Sqft	1541	
FBM Quality	3	
FIN ATC Sqft		
FIN ATC Quality		
Fireplaces	1	
WS Flues	1	

CONSTRUCTION DETAIL (CONTINUED)

Element	Cd	Description
Central Vac	0	NO
Basement Floor	12	CONCRETE
Bsmt Garage		
Units	1	

MIXED USE

Code	Description	Percentage
101	ONE FAM	100
		0
		0

COST / MARKET VALUATION

Adj Base Rate	146.33
RCN	424,380
Net Other Adj	
Year Built	1962
Effective Year Built	1988
Depreciation Code	AG
Remodel Rating	
Year Remodeled	
Depreciation %	37
Functional Obsol	
External Obsol	
Cost Trend Factor	1
Condition	
% Complete	
Overall % Condition	63
RCNLD	267,400
Dep % Ovr	
Dep Ovr Comment	
Misc Imp Ovr	
Misc Imp Ovr Comment	
Cost to Cure Ovr	
Cost to Cure Ovr Comment	

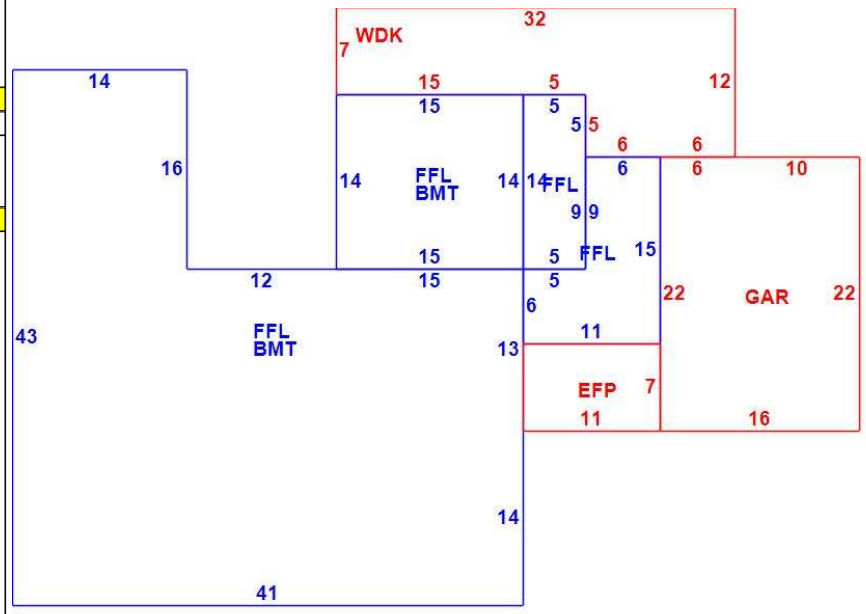

OB - OUTBUILDING & YARD ITEMS(L) / XF - BUILDING EXTRA FEATURES(B)

Code	Description	Su	Sub Type	Lan	Units	Unit Price	Yr Blt	%	Dep.	Cond	Gra	Qual	Apprais Va
SOL	Solar Panels	EX	Extra Fea	B	1	0.00	2025	63	1.00	AV	A	0.00	0

BUILDING SUB-AREA SUMMARY SECTION

Subarea	Description	Living	Gross	Eff Area	Unit Cost	Undeprec Value
BMT	BASEMENT	0	1,541		37.27	57,429
EFP	ENCL PORCH	0	77		94.44	7,272
FFL	1ST FLOOR	1,731	1,731		186.46	322,760
GAR	GARAGE	0	352		74.69	26,291
WDK	WOOD DECK	0	284		37.42	10,628
	Ttl Gross Liv / Lease Area	1,731	3,985			424,380