Property Location 321 PROSPECT ST | Map ID 30/ 10/ 2/ / | Bldg Name | State Use 101
Vision ID 2663 | Account # 2709 | Bldg # 1 | Sec # 1 of 1 | Card # 1 of 1 | Print Date 11/20/2025 8:32:51 A

CURRENT OWNER	TOPO TYPE	UTILITY	STREET	LOCATION
FOY BRIDGET				
	TOPO WET	EASEMENT	TRAFFIC	CORNER
321 PROSPECT ST				
	DRAINAGE		VIEW	COMMUNITY
EAST LONGMEADOW MA 01028				

GIS ID F_382207_2844977

SUPPLEMENTAL DATA

Alt Prcl ID	Received
SP Permit	NIA
Chapter Land	Field 8
OC Dates	Field 9
In+Ex FY	Field 10
Mailed	Assoc Pid#

CURRENT ASSESSMENT

Description	Code	Appraised	Assessed
RESIDNTL.	101	270800	270,800
RES LAND	101	125900	125,900
Total		396,700	396,700

1006

EAST LONGMEADOW

RECORD OF OWNERSHIP

	BK-VOL/PAGE		SALE DATE	Q/U	V/I	SALE PRICE	VC
FOY BRIDGET	23328	0360	07-24-2020	Q	I	298,000	00
WOLSLEGEL THOMAS E	15960	0191	06-07-2006	U	I	277,000	
BOLDEBOOK,JIM	15202	0564	07-27-2005	U	I	239,000	1A
LAVERTUE HERBERT R +,	04513	0219	11-14-1977	U	I	0	

PREVIOUS ASSESSMENTS (HISTORY)

Year	Code	Assessed	Year	Code	Assessed	Year	Code	Assessed
2025	101	246,000	2024	101	227,500	2023	101	208,900
	101	125,900		101	125,900		101	114,100
	Total	371,900		Total	353,400		Total	323,000

EXEMPTIONS

Year	Code	Description	Amount
		Total	

OTHER ASSESSMENTS

Code	Description	YEAR	Amount	Comm Int

This signature acknowledges a visit by a Data Collector or Assessor

ASSESSING NEIGHBORHOOD

Nbhd	Nbhd Name		Tracing	Batch
0001			101	MG

NOTES

APPRAISED VALUE SUMMARY

Appraised BLDG. Value (Card)	270,800
Appraised Xf (B) Value (Bldg)	0
Appraised Ob (B) Value (Bldg)	0
Appraised Land Value (Bldg)	125,900
Special Land Value	0
Total Appraised Parcel Value	396,700
Valuation Method	C
Adjustment	
Net Total Appraised Parcel Value	396,700

BUILDING PERMIT RECORD

Permit Id	Issue Date	Type	Description	Amount	Insp Date	% Comp	Date Comp	Comments
B-24-596	09-09-2024	21	SIDING	22,000	07-08-2025	100	07-08-2025	VINYL
202202698	09-09-2022	25	WINDOWS	4,000		0		REPLC 2 WINDOW
202102467	07-30-2021	12	REROOF	52,120	06-13-2022	100	03-15-2022	TREE DAMAGE RO
202002802	10-20-2020	91	INSULATION	6,000		0		
201203589	12-14-2012	91	INSULATION	4,500				

VISIT / CHANGE HISTORY

Date	Type	Is	Id	Cd	Purpose/Result
07-08-2025			334	15	PERMIT VISIT
11-06-2015			317	2	MEASURED
09-13-2003			274	3	MEAS+INSPCTD
02-20-1992			170	3	MEAS+INSPCTD
09-03-1980			500	3	MEAS+INSPCTD

LAND LINE VALUATION SECTION

B	Use Co	Description	Zone	D	Fronta	Depth	Land Units		Unit Price	I. Fact	S.A.	Ac Di	C. Fact	St. Idx	Adj	Notes	Special Pricing				Size A	Adj Unit Pric	Land Value
1	101	ONE FAM	RAA				21,780	SF	5.35	1.200	7	LAND	1.00	MG	1.00			0	TRF1	0.9	1.000	5.78	125,900
						Total Card Land Units	0.50	AC	Parcel Total Land Area:			0.50										Total Land Value	125,900

Property Location 321 PROSPECT ST | Map ID 30/ 10/ 2/ / | Bldg Name | State Use 101
Vision ID 2663 | Account # 2709 | Bldg # 1 | Sec # 1 of 1 | Card # 1 of 1 | Print Date 11/20/2025 8:32:52 A

CONSTRUCTION DETAIL

Element	Cd	Description
Style	19	RANCH
Model	01	RESIDENTIAL
Grade	C+	AVG. (+)
Stories	1.00	1 STORY
Foundation	1	CONCRETE
Exterior Wall 1	4	VINYL
Exterior Wall 2	16	STONE VENR
Roof Structure	1	GABLE
Roof Cover	1	ASPHALT SH
Interior Wall 1	2	PLASTER
Interior Wall 2		
Interior Floor 1	3	HARDWOOD
Interior Floor 2	4	CARPET
Heat Fuel	1	OIL
Heat Type	3	FORCED H/W
AC Type	01	NONE
Bedrooms	2	
Full Baths	1	
Half Baths	1	
Extra Fixtures	0	
Total Rooms	5	
Bath Style	G	GOOD
Half Bath Style	G	GOOD
Kitchens	1	
Kitchen Style	G	GOOD
Extra Kitchens	0	
Extra Kitchen St		
FBM Sqft	593	
FBM Quality	1	
FIN ATC Sqft		
FIN ATC Quality		
Fireplaces	2	
WS Flues		

CONSTRUCTION DETAIL (CONTINUED)

Element	Cd	Description
Central Vac	0	NO
Basement Floor	12	CONCRETE
Bsmt Garage		
Units	1	

MIXED USE

Code	Description	Percentage
101	ONE FAM	100
		0
		0

COST / MARKET VALUATION

Adj Base Rate	142.50
RCN	386,842
Net Other Adj	
Year Built	1955
Effective Year Built	1995
Depreciation Code	GD
Remodel Rating	
Year Remodeled	
Depreciation %	30
Functional Obsol	
External Obsol	
Cost Trend Factor	1
Condition	
% Complete	
Overall % Condition	70
RCNLD	270,800
Dep % Ovr	
Dep Ovr Comment	
Misc Imp Ovr	
Misc Imp Ovr Comment	
Cost to Cure Ovr	
Cost to Cure Ovr Comment	

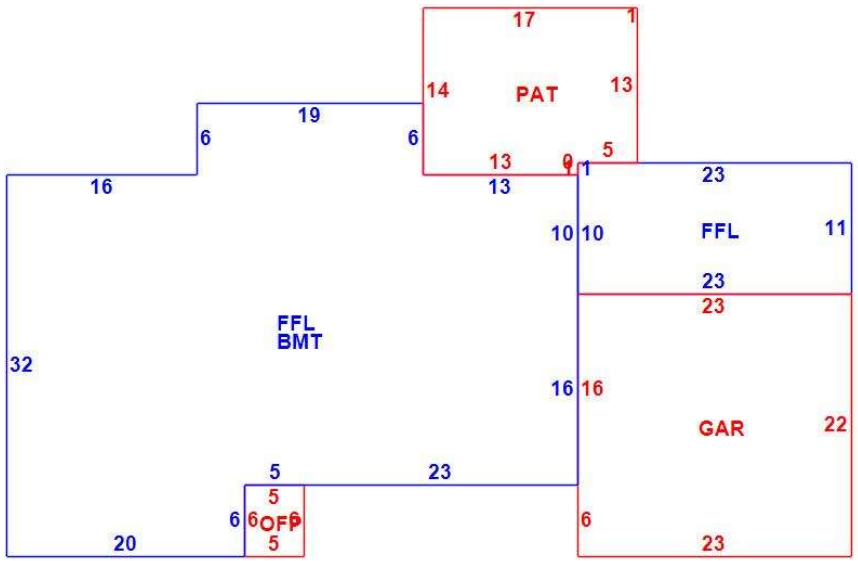

OB - OUTBUILDING & YARD ITEMS(L) / XF - BUILDING EXTRA FEATURES(B)

Code	Description	Su	Sub Type	Lan	Units	Unit Price	Yr Blt	%	Dep.	Cond	Gra	Qual	Apprais Va

BUILDING SUB-AREA SUMMARY SECTION

Subarea	Description	Living	Gross	Eff Area	Unit Cost	Undeprec Value
BMT	BASEMENT	0	1,482		34.37	50,936
FFL	1ST FLOOR	1,735	1,735		172.08	298,563
GAR	GARAGE	0	506		68.70	34,761
OFP	OPEN PORCH	0	30		17.21	516
PAT	PATIO	0	247		8.36	2,065
	Ttl Gross Liv / Lease Area	1,735	4,000			386,842