Property Location 25 DEVONSHIRE TR | Map ID 31/ 13/ 9R/ / | Bldg Name | State Use 101
Vision ID 2697 | Account # 2743 | Bldg # 1 | Sec # 1 of 1 | Card # 1 of 1 | Print Date 11/20/2025 8:38:27 A

CURRENT OWNER	TOPO TYPE	UTILITY	STREET	LOCATION
SEBUGWAWO LYDIA N				
	TOPO WET	EASEMENT	TRAFFIC	CORNER
25 DEVONSHIRE TR				
	DRAINAGE		VIEW	COMMUNITY
EAST LONGMEADOW MA 01028				

SUPPLEMENTAL DATA

Alt Prcl ID	Received
SP Permit	NIA
Chapter Land	Field 8
OC Dates	Field 9
In+Ex FY	Field 10
Mailed	Assoc Pid#

GIS ID F_383370_2842713

CURRENT ASSESSMENT

Description	Code	Appraised	Assessed
RESIDNTL.	101	811800	811,800
RES LAND	101	196400	196,400
RESIDNTL.	101	5500	5,500
Total		1,013,700	1,013,700

1006

EAST LONGMEADOW

RECORD OF OWNERSHIP

	BK-VOL/PAGE		SALE DATE	Q/U	V/I	SALE PRICE	VC
SEBUGWAWO LYDIA N	23724	0215	02-23-2021	U	I	605,000	1
KHAN FIRYAL	16983	0473	10-18-2007	U	I	800,000	
DIGIACOMO ENZO V + MARY LOUISE,	11723	0300	06-28-2001	U	I	1	1A
EGAN,JOHN T TRUSTEE OF THE	09933	0131	07-18-1997	U	V	160,000	1
DAVIS JOHN H + STEPHEN A	09348	0253	12-27-1995	U	V	1	1B

PREVIOUS ASSESSMENTS (HISTORY)

Year	Code	Assessed	Year	Code	Assessed	Year	Code	Assessed
2025	101	760,200	2024	101	712,800	2023	101	664,000
	101	196,400		101	196,400		101	178,800
	101	5,500		101	5,500		101	4,000
	Total	962,100		Total	914,700		Total	846,800

EXEMPTIONS

Year	Code	Description	Amount
		Total	

OTHER ASSESSMENTS

Code	Description	YEAR	Amount	Comm Int

This signature acknowledges a visit by a Data Collector or Assessor

APPRAISED VALUE SUMMARY

Appraised BLDG. Value (Card)	811,800
Appraised Xf (B) Value (Bldg)	0
Appraised Ob (B) Value (Bldg)	5,500
Appraised Land Value (Bldg)	196,400
Special Land Value	0
Total Appraised Parcel Value	1,013,700
Valuation Method	C
Adjustment	
Net Total Appraised Parcel Value	1,013,700

ASSESSING NEIGHBORHOOD

Nbhd	Nbhd Name		Tracing	Batch
0001			101	NS

NOTES

SUB DIV #778,816

BUILDING PERMIT RECORD

Permit Id	Issue Date	Type	Description	Amount	Insp Date	% Comp	Date Comp	Comments
202201024	03-28-2022	62	SOLAR	54,992	04-22-2022	100	04-22-2022	FRONT & SIDES
318	10-08-2008	62	SOLAR	51,910				SOLAR HEAT PANE
157	07-17-1997	2	DWELLING	500,000				

VISIT / CHANGE HISTORY

Date	Type	Is	Id	Cd	Purpose/Result
03-19-2018			333	2	MEASURED
12-09-2010			317	15	PERMIT VISIT
12-04-2009			317	15	PERMIT VISIT
01-07-2009			317	15	PERMIT VISIT
05-02-2008			317	3	MEAS+INSPCTD
11-05-1999			247	3	MEAS+INSPCTD
03-18-1999			105	15	PERMIT VISIT

LAND LINE VALUATION SECTION

B	Use Co	Description	Zone	D	Fronta	Depth	Land Units		Unit Price	I. Fact	S.A.	Ac Di	C. Fact	St. Idx	Adj	Notes	Special Pricing				Size A	Adj Unit Pric	Land Value
1	101	ONE FAM	RAA				40,000	SF	3.12	1.550	2	LAND	1.00	NS	1.00			0			1.000	4.84	193,600
1	101	ONE FAM	RAA				0.400	AC	7,000.00	1.000	0		1.00	NS	1.00			0			1.000	7,000	2,800
						Total Card Land Units	1.32	AC	Parcel Total Land Area:	1.32												Total Land Value	196,400

Property Location 25 DEVONSHIRE TR | Map ID 31/ 13/ 9R/ / | Bldg Name | State Use 101
Vision ID 2697 | Account # 2743 | Bldg # 1 | Sec # 1 of 1 | Card # 1 of 1 | Print Date 11/20/2025 8:38:28 A

CONSTRUCTION DETAIL

Element	Cd	Description
Style	06	COLONIAL
Model	01	RESIDENTIAL
Grade	A-	V GOOD-
Stories	2.00	2 STORY
Foundation	1	CONCRETE
Exterior Wall 1	8	BRICK VENR
Exterior Wall 2		
Roof Structure	2	HIP
Roof Cover	1	ASPHALT SH
Interior Wall 1	1	DRYWALL
Interior Wall 2		
Interior Floor 1	3	HARDWOOD
Interior Floor 2	4	CARPET
Heat Fuel	2	GAS
Heat Type	1	FORCED H/A
AC Type	03	FULL
Bedrooms	4	
Full Baths	4	
Half Baths	2	
Extra Fixtures	5	
Total Rooms	9	
Bath Style	G	GOOD
Half Bath Style	G	GOOD
Kitchens	1	
Kitchen Style	G	GOOD
Extra Kitchens	0	
Extra Kitchen St		
FBM Sqft	1689	
FBM Quality	3	
FIN ATC Sqft		
FIN ATC Quality		
Fireplaces	1	
WS Flues		

CONSTRUCTION DETAIL (CONTINUED)

Element	Cd	Description
Central Vac	1	YES
Basement Floor	12	CONCRETE
Bsmt Garage		
Units	1	

MIXED USE

Code	Description	Percentage
101	ONE FAM	100
		0
		0

COST / MARKET VALUATION

Adj Base Rate	102.73
RCN	1,040,761
Net Other Adj	
Year Built	1997
Effective Year Built	2003
Depreciation Code	AV
Remodel Rating	
Year Remodeled	
Depreciation %	22
Functional Obsol	
External Obsol	
Cost Trend Factor	1
Condition	
% Complete	
Overall % Condition	78
RCNLD	811,800
Dep % Ovr	
Dep Ovr Comment	
Misc Imp Ovr	
Misc Imp Ovr Comment	
Cost to Cure Ovr	
Cost to Cure Ovr Comment	

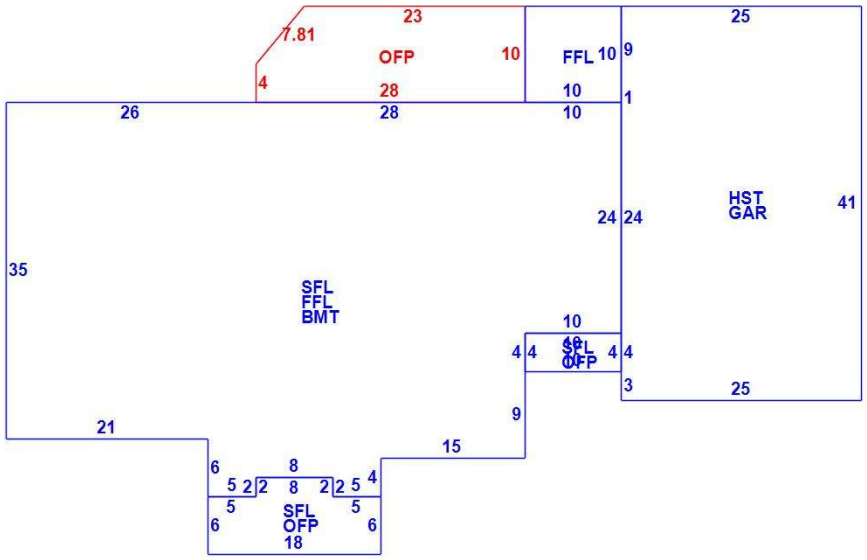

OB - OUTBUILDING & YARD ITEMS(L) / XF - BUILDING EXTRA FEATURES(B)

Code	Description	Su	Sub Type	Lan	Units	Unit Price	Yr Blt	%	Dep.	Cond	Gra	Qual	Apprais Va
19	PATIO			L	540	8.00	1999	85	0.00	VG	V	1.50	5,500
SOL	Solar Panels	EX	Extra Fea	B	1	0.00	2023	78	1.00	AV	A	0.00	0

BUILDING SUB-AREA SUMMARY SECTION

Subarea	Description	Living	Gross	Eff Area	Unit Cost	Undeprec Value
BMT	BASEMENT	0	2,252		33.63	75,735
FFL	1ST FLOOR	2,352	2,352		168.30	395,839
GAR	GARAGE	0	1,025		67.32	69,003
HST	HALF STORY	513	1,025		84.23	86,337
OFP	OPEN PORCH	0	429		16.87	7,237
SFL	2ND FLOOR	2,416	2,416		168.30	406,610
	Ttl Gross Liv / Lease Area	5,281	9,499			1,040,761