Property Location 96 MEADOW RD | Map ID 35/ 37/ 183/ / | Bldg Name | State Use 101
Vision ID 2910 | Account # 2960 | Bldg # 1 | Sec # 1 of 1 | Card # 1 of 1 | Print Date 11/20/2025 9:08:55 A

CURRENT OWNER	TOPO TYPE	UTILITY	STREET	LOCATION
LLOYD LEIGH A				
	TOPO WET	EASEMENT	TRAFFIC	CORNER
96 MEADOW RD				
	DRAINAGE		VIEW	COMMUNITY
EAST LONGMEADOW MA 01028				

GIS ID F_384501_2854846

SUPPLEMENTAL DATA

Alt Prcl ID	Received
SP Permit	NIA
Chapter Land	Field 8
OC Dates	Field 9
In+Ex FY	Field 10
Mailed	Assoc Pid#

CURRENT ASSESSMENT

Description	Code	Appraised	Assessed
RESIDNTL.	101	240700	240,700
RES LAND	101	137600	137,600
Total		378,300	378,300

1006

EAST LONGMEADOW

RECORD OF OWNERSHIP

	BK-VOL/PAGE		SALE DATE	Q/U	V/I	SALE PRICE	VC
LLOYD LEIGH A	20805	0488	07-28-2015	Q	I	256,000	00
JANGL NATALIE G	18845	0493	07-18-2011	U	I	1	1
JANGL ALOYSIUS J ,	06356	0557	01-09-1987	U	I	138,500	
MCCLOSKEY	05957	0466	12-04-1985	U	I	104,000	

PREVIOUS ASSESSMENTS (HISTORY)

Year	Code	Assessed	Year	Code	Assessed	Year	Code	Assessed
2025	101	196,300	2024	101	181,100	2023	101	165,900
	101	137,600		101	137,600		101	125,000
	Total	333,900		Total	318,700		Total	290,900

EXEMPTIONS

Year	Code	Description	Amount
		Total	

OTHER ASSESSMENTS

Code	Description	YEAR	Amount	Comm Int

This signature acknowledges a visit by a Data Collector or Assessor

ASSESSING NEIGHBORHOOD

Nbhd	Nbhd Name		Tracing	Batch
0001			101	MG

NOTES

APPRAISED VALUE SUMMARY

Appraised BLDG. Value (Card)	240,700
Appraised Xf (B) Value (Bldg)	0
Appraised Ob (B) Value (Bldg)	0
Appraised Land Value (Bldg)	137,600
Special Land Value	0
Total Appraised Parcel Value	378,300
Valuation Method	C
Adjustment	
Net Total Appraised Parcel Value	378,300

BUILDING PERMIT RECORD

Permit Id	Issue Date	Type	Description	Amount	Insp Date	% Comp	Date Comp	Comments
B-24-720	11-05-2024	21	SIDING	33,725	07-08-2025	100	07-08-2025	VINYL SIDE HOUSE
B-24-396	06-27-2024	62	SOLAR	15,117	05-08-2025	100	07-18-2024	10 PANELS
B-24-36	01-31-2024	62	SOLAR	13,000	06-06-2024	0		RECK 6/2025 - 8 PA
201901946	05-29-2019	62	SOLAR	24,000	05-27-2020	100	08-19-2019	STRUCTURAL UPG
201800186	01-23-2018	25	WINDOWS	18,935	05-22-2018	100	05-22-2018	21 REPLACEMENT/

VISIT / CHANGE HISTORY

Date	Type	Is	Id	Cd	Purpose/Result
07-08-2025			334	15	PERMIT VISIT
05-07-2025			400	15	PERMIT VISIT
06-06-2024			450	15	PERMIT VISIT
05-27-2020			400	15	PERMIT VISIT
05-22-2018			400	15	PERMIT VISIT
09-04-2015			317	2	MEASURED
08-30-2003			274	3	MEAS+INSPCTD

LAND LINE VALUATION SECTION

B	Use Co	Description	Zone	D	Fronta	Depth	Land Units		Unit Price	I. Fact	S.A.	Ac Di	C. Fact	St. Idx	Adj	Notes	Special Pricing				Size A	Adj Unit Pric	Land Value
1	101	ONE FAM	RA				18,063	SF	6.35	1.200	7	LAND	1.00	MG	1.00			0			1.000	7.62	137,600
						Total Card Land Units	0.41	AC	Parcel Total Land Area:			0.41										Total Land Value	137,600

Property Location 96 MEADOW RD | Map ID 35/ 37/ 183/ / | Bldg Name | State Use 101
Vision ID 2910 | Account # 2960 | Bldg # 1 | Sec # 1 of 1 | Card # 1 of 1 | Print Date 11/20/2025 9:08:55 A

CONSTRUCTION DETAIL

Element	Cd	Description
Style	05	CAPE
Model	01	RESIDENTIAL
Grade	C	AVERAGE
Stories	1.50	1 1/2 STORIES
Foundation	1	CONCRETE
Exterior Wall 1	4	VINYL
Exterior Wall 2		
Roof Structure	1	GABLE
Roof Cover	1	ASPHALT SH
Interior Wall 1	2	PLASTER
Interior Wall 2		
Interior Floor 1	4	CARPET
Interior Floor 2	3	HARDWOOD
Heat Fuel	1	OIL
Heat Type	1	FORCED H/A
AC Type	01	NONE
Bedrooms	4	
Full Baths	2	
Half Baths	0	
Extra Fixtures	1	
Total Rooms	7	
Bath Style	A	AVERAGE
Half Bath Style	N	NONE
Kitchens	1	
Kitchen Style	A	AVERAGE
Extra Kitchens	0	
Extra Kitchen St	N	NONE
FBM Sqft		
FBM Quality		
FIN ATC Sqft		
FIN ATC Quality		
Fireplaces	1	
WS Flues	0	

CONSTRUCTION DETAIL (CONTINUED)

Element	Cd	Description
Central Vac	0	NO
Basement Floor	12	CONCRETE
Bsmt Garage	0	
Units	1	

MIXED USE

Code	Description	Percentage
101	ONE FAM	100
		0
		0

COST / MARKET VALUATION

Adj Base Rate	149.55
RCN	343,794
Net Other Adj	
Year Built	1952
Effective Year Built	1995
Depreciation Code	GD
Remodel Rating	
Year Remodeled	
Depreciation %	30
Functional Obsol	
External Obsol	
Cost Trend Factor	1
Condition	
% Complete	
Overall % Condition	70
RCNLD	240,700
Dep % Ovr	
Dep Ovr Comment	
Misc Imp Ovr	
Misc Imp Ovr Comment	
Cost to Cure Ovr	
Cost to Cure Ovr Comment	

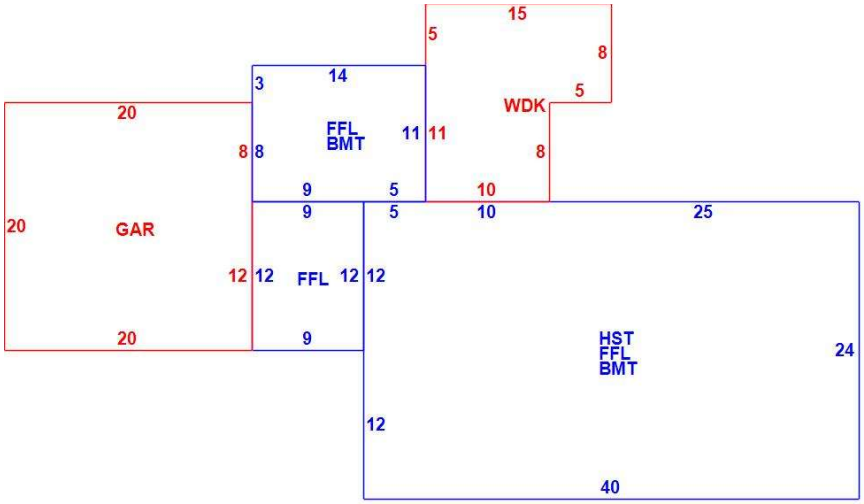

OB - OUTBUILDING & YARD ITEMS(L) / XF - BUILDING EXTRA FEATURES(B)

Code	Description	Su	Sub Type	Lan	Units	Unit Price	Yr Blt	%	Dep.	Cond	Gra	Qual	Apprais Va
SOL	Solar Panels	EX	Extra Fea	B	1	0.00	2020	70	1.00	AV	A	0.00	0
SOL	Solar Panels	EX	Extra Fea	B	1	0.00	2025	70	1.00	AV	A	0.00	0

BUILDING SUB-AREA SUMMARY SECTION

Subarea	Description	Living	Gross	Eff Area	Unit Cost	Undeprec Value
BMT	BASEMENT	0	1,114		32.39	36,078
FFL	1ST FLOOR	1,222	1,222		161.79	197,702
GAR	GARAGE	0	400		64.71	25,886
HST	HALF STORY	480	960		80.89	77,657
WDK	WOOD DECK	0	200		32.36	6,471
	Ttl Gross Liv / Lease Area	1,702	3,896			343,794