Property Location 24 OLD PASTURE DR | Map ID 42/ 20/ 40/ / | Bldg Name | State Use 101
Vision ID 3549 | Account # 3606 | Bldg # 1 | Sec # 1 of 1 | Card # 1 of 1 | Print Date 11/20/2025 11:44:03 A

CURRENT OWNER	TOPO TYPE	UTILITY	STREET	LOCATION
ARNESEN ARNE O III				
ARNESEN MARY CHRIS	TOPO WET	EASEMENT	TRAFFIC	CORNER
24 OLD PASTURE RD	DRAINAGE		VIEW	COMMUNITY
EAST LONGMEADOW MA 01028				

SUPPLEMENTAL DATA

Alt Prcl ID	Received
SP Permit	NIA
Chapter Land	Field 8
OC Dates	Field 9
In+Ex FY	Field 10
Mailed	Assoc Pid#

GIS ID F_384500_2844008

CURRENT ASSESSMENT

Description	Code	Appraised	Assessed
RESIDNTL.	101	494000	494,000
RES LAND	101	174600	174,600
RESIDNTL.	101	13500	13,500
Total		682,100	682,100

1006
EAST LONGMEADOW

RECORD OF OWNERSHIP

	BK-VOL/PAGE		SALE DATE	Q/U	V/I	SALE PRICE	VC
ARNESEN ARNE O III	19881	0319	06-21-2013	U	I	455,000	1
PLACZEK DAVID S ,	08609	0251	10-27-1993	U	V	67,000	
WARD JOSEPH E ETAL D/B/A	06972	0245	09-22-1988	U	I	1	1B
WARD JOSEPH	00000	0000		U		0	

PREVIOUS ASSESSMENTS (HISTORY)

Year	Code	Assessed	Year	Code	Assessed	Year	Code	Assessed
2025	101	461,400	2024	101	431,500	2023	101	395,500
	101	174,600		101	174,600		101	159,000
	101	13,500		101	13,500		101	12,800
	Total	649,500		Total	619,600		Total	567,300

EXEMPTIONS

Year	Code	Description	Amount
		Total	

OTHER ASSESSMENTS

Code	Description	YEAR	Amount	Comm Int

This signature acknowledges a visit by a Data Collector or Assessor

ASSESSING NEIGHBORHOOD

Nbhd	Nbhd Name		Tracing	Batch
0001			101	NS

NOTES

APPRAISED VALUE SUMMARY

Appraised BLDG. Value (Card)	494,000
Appraised Xf (B) Value (Bldg)	0
Appraised Ob (B) Value (Bldg)	13,500
Appraised Land Value (Bldg)	174,600
Special Land Value	0
Total Appraised Parcel Value	682,100
Valuation Method	C
Adjustment	
Net Total Appraised Parcel Value	682,100

BUILDING PERMIT RECORD

Permit Id	Issue Date	Type	Description	Amount	Insp Date	% Comp	Date Comp	Comments
202203141	11-29-2022	91	INSULATION	9,500		0		
217	09-06-1999	11	POOL	7,000				
42	04-02-1999	10	SHED	750				
313	10-01-1993	MN	Manual Note	280,000				DWELLING

VISIT / CHANGE HISTORY

Date	Type	Is	Id	Cd	Purpose/Result
01-31-2014	01		317	24	ABATEMENT VI
05-28-2013			317	15	PERMIT VISIT
07-11-2012			317	16	FIELDREV CHG
10-09-2002			250	22	MAILER SENT
10-08-2002			274	2	MEASURED
11-16-1999			247	15	PERMIT VISIT
11-08-1999			247	15	PERMIT VISIT

LAND LINE VALUATION SECTION

B	Use Co	Description	Zone	D	Fronta	Depth	Land Units		Unit Price	I. Fact	S.A.	Ac Di	C. Fact	St. Idx	Adj	Notes	Special Pricing				Size A	Adj Unit Pric	Land Value
1	101	ONE FAM	RAA				40,000	SF	3.12	1.550	2	LAND	0.90	NS	1.00	WET1		0			1.000	4.35	174,000
1	101	ONE FAM	RAA				0.080	AC	7,000.00	1.000	0		1.00	NS	1.00			0			1.000	7,000	600
						Total Card Land Units	1.00	AC	Parcel Total Land Area:	1.00												Total Land Value	174,600

Property Location 24 OLD PASTURE DR | Map ID 42/ 20/ 40/ / | Bldg Name | State Use 101
Vision ID 3549 | Account # 3606 | Bldg # 1 | Sec # 1 of 1 | Card # 1 of 1 | Print Date 11/20/2025 11:44:04 A

CONSTRUCTION DETAIL

Element	Cd	Description
Style	06	COLONIAL
Model	01	RESIDENTIAL
Grade	B	GOOD
Stories	2.00	2 STORY
Foundation	1	CONCRETE
Exterior Wall 1	8	BRICK VENR
Exterior Wall 2	4	VINYL
Roof Structure	2	HIP
Roof Cover	1	ASPHALT SH
Interior Wall 1	1	DRYWALL
Interior Wall 2		
Interior Floor 1	4	CARPET
Interior Floor 2	3	HARDWOOD
Heat Fuel	2	GAS
Heat Type	1	FORCED H/A
AC Type	03	FULL
Bedrooms	4	
Full Baths	2	
Half Baths	1	
Extra Fixtures	3	
Total Rooms	10	
Bath Style	G	GOOD
Half Bath Style	G	GOOD
Kitchens	1	
Kitchen Style	G	GOOD
Extra Kitchens	0	
Extra Kitchen St		
FBM Sqft		
FBM Quality		
FIN ATC Sqft		
FIN ATC Quality		
Fireplaces	1	
WS Flues		

CONSTRUCTION DETAIL (CONTINUED)

Element	Cd	Description
Central Vac	1	YES
Basement Floor	12	CONCRETE
Bsmt Garage		
Units	1	

MIXED USE

Code	Description	Percentage
101	ONE FAM	100
		0
		0

COST / MARKET VALUATION

Adj Base Rate	108.13
RCN	641,510
Net Other Adj	
Year Built	1993
Effective Year Built	2007
Depreciation Code	GD
Remodel Rating	
Year Remodeled	
Depreciation %	18
Functional Obsol	5
External Obsol	
Cost Trend Factor	1
Condition	
% Complete	
Overall % Condition	77
RCNLD	494,000
Dep % Ovr	
Dep Ovr Comment	
Misc Imp Ovr	
Misc Imp Ovr Comment	
Cost to Cure Ovr	
Cost to Cure Ovr Comment	

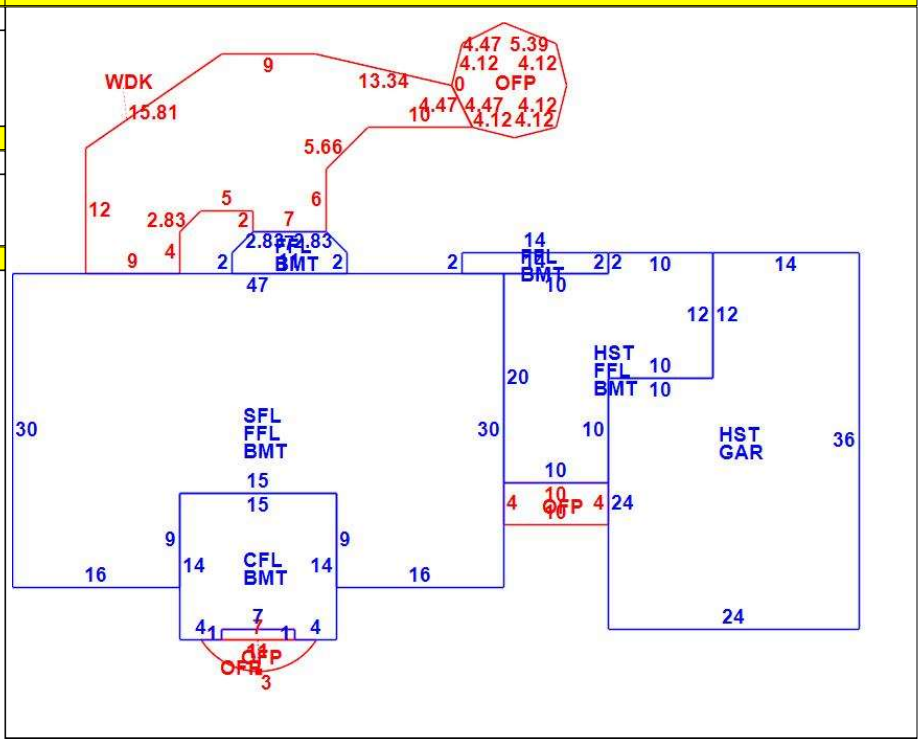

OB - OUTBUILDING & YARD ITEMS(L) / XF - BUILDING EXTRA FEATURES(B)

Code	Description	Su	Sub Type	Lan	Units	Unit Price	Yr Blt	%	Dep.	Cond	Gra	Qual	Apprais Va
11	POOL I-V	OB	Outbuildi	L	648	29.00	1999	60	0.00	AV	A	1.00	11,300
02	SHED/FR			L	168	12.00	1999	60	0.00	AV	A	1.00	1,200
19	PATIO			L	216	8.00	1999	60	0.00	AV	A	1.00	1,000

BUILDING SUB-AREA SUMMARY SECTION

Subarea	Description	Living	Gross	Eff Area	Unit Cost	Undeprec Value
BMT	BASEMENT	0	1,866		28.80	53,735
CFL	CATHEDRAL CE	203	203		148.32	30,109
FFL	1ST FLOOR	1,663	1,663		144.06	239,576
GAR	GARAGE	0	744		57.70	42,931
HST	HALF STORY	532	1,064		72.03	76,641
OFP	OPEN PORCH	0	161		14.32	2,305
SFL	2ND FLOOR	1,275	1,275		144.06	183,680
WDK	WOOD DECK	0	433		28.95	12,533
	Ttl Gross Liv / Lease Area	3,673	7,409			641,510