Property Location 73 PROSPECT HILLS DR | Map ID 42/ 44/ 44/ / | Bldg Name | State Use 101
Vision ID 3574 | Account # 3631 | Bldg # 1 | Sec # 1 of 1 | Card # 1 of 1 | Print Date 11/20/2025 11:47:54 A

CURRENT OWNER	TOPO TYPE	UTILITY	STREET	LOCATION
MCCARTHY MICHAEL F				
MCCARTHY GRACE C	TOPO WET	EASEMENT	TRAFFIC	CORNER
73 PROSPECT HILLS DR	DRAINAGE		VIEW	COMMUNITY
EAST LONGMEADOW MA 01028				

GIS ID F_384122_2844426

SUPPLEMENTAL DATA

Alt Prcl ID	Received
SP Permit	NIA
Chapter Land	Field 8
OC Dates	Field 9
In+Ex FY	Field 10
Mailed	Assoc Pid#

CURRENT ASSESSMENT

Description	Code	Appraised	Assessed
RESIDNTL.	101	772000	772,000
RES LAND	101	195400	195,400
RESIDNTL.	101	10400	10,400
Total		977,800	977,800

1006
EAST LONGMEADOW

RECORD OF OWNERSHIP

	BK-VOL/PAGE		SALE DATE	Q/U	V/I	SALE PRICE	VC
MCCARTHY MICHAEL F	09147	0281	06-01-1995	U	I	500,000	1
G J R CONSTRUCTION INC	08951	0002	09-27-1994	U	V	68,000	
MCCARTHY MICHAEL F + GRAC	08315	0554	01-21-1993	U	V	68,000	
WARD JOSEPH E ETAL D/B/A	06972	0245	09-22-1988	U	I	1	1B
WARD	00000	0000		U		0	

PREVIOUS ASSESSMENTS (HISTORY)

Year	Code	Assessed	Year	Code	Assessed	Year	Code	Assessed
2025	101	723,500	2024	101	670,600	2023	101	632,600
	101	195,400		101	195,400		101	177,800
	101	10,400		101	10,400		101	10,400
	Total	929,300		Total	876,400		Total	820,800

EXEMPTIONS

Year	Code	Description	Amount
		Total	

OTHER ASSESSMENTS

Code	Description	YEAR	Amount	Comm Int

This signature acknowledges a visit by a Data Collector or Assessor

ASSESSING NEIGHBORHOOD

Nbhd	Nbhd Name		Tracing	Batch
0001			101	NS

NOTES

APPRAISED VALUE SUMMARY

Appraised BLDG. Value (Card)	772,000
Appraised Xf (B) Value (Bldg)	0
Appraised Ob (B) Value (Bldg)	10,400
Appraised Land Value (Bldg)	195,400
Special Land Value	0
Total Appraised Parcel Value	977,800
Valuation Method	C
Adjustment	
Net Total Appraised Parcel Value	977,800

BUILDING PERMIT RECORD

Permit Id	Issue Date	Type	Description	Amount	Insp Date	% Comp	Date Comp	Comments
201301390	04-17-2013	GEN	GENERATOR	6,000				
144	06-06-1995	MN	Manual Note	10,000				POOL
248	09-01-1994	MN	Manual Note	340,000				DWELLING

VISIT / CHANGE HISTORY

Date	Type	Is	Id	Cd	Purpose/Result
05-28-2013			317	15	PERMIT VISIT
01-04-2013			317	2	MEASURED
10-03-2002			274	3	MEAS+INSPCTD
04-01-1996			107	2	MEASURED
12-28-1995			107	15	PERMIT VISIT
03-06-1995			107	15	PERMIT VISIT

LAND LINE VALUATION SECTION

B	Use Co	Description	Zone	D	Fronta	Depth	Land Units		Unit Price	I. Fact	S.A.	Ac Di	C. Fact	St. Idx	Adj	Notes	Special Pricing				Size A	Adj Unit Pric	Land Value
1	101	ONE FAM	RAA				40,000	SF	3.12	1.550	2	LAND	1.00	NS	1.00			0			1.000	4.84	193,600
1	101	ONE FAM	RAA				0.260	AC	7,000.00	1.000	0		1.00	NS	1.00			0			1.000	7,000	1,800
						Total Card Land Units	1.18	AC	Parcel Total Land Area:	1.18												Total Land Value	195,400

Property Location 73 PROSPECT HILLS DR | Map ID 42/ 44/ 44/ / | Bldg Name | State Use 101
Vision ID 3574 | Account # 3631 | Bldg # 1 | Sec # 1 of 1 | Card # 1 of 1 | Print Date 11/20/2025 11:47:54 A

CONSTRUCTION DETAIL

Element	Cd	Description
Style	06	COLONIAL
Model	01	RESIDENTIAL
Grade	B+	GOOD (+)
Stories	2.00	2 STORY
Foundation	1	CONCRETE
Exterior Wall 1	6	STUCCO
Exterior Wall 2	2	CLAPBOARD
Roof Structure	2	HIP
Roof Cover	1	ASPHALT SH
Interior Wall 1	1	DRYWALL
Interior Wall 2		
Interior Floor 1	3	HARDWOOD
Interior Floor 2	4	CARPET
Heat Fuel	2	GAS
Heat Type	1	FORCED H/A
AC Type	03	FULL
Bedrooms	5	
Full Baths	5	
Half Baths	1	
Extra Fixtures	5	
Total Rooms	11	
Bath Style	G	GOOD
Half Bath Style	G	GOOD
Kitchens	1	
Kitchen Style	V	V GOOD
Extra Kitchens	0	
Extra Kitchen St		
FBM Sqft	1084	
FBM Quality	3	
FIN ATC Sqft		
FIN ATC Quality		
Fireplaces	3	
WS Flues		

CONSTRUCTION DETAIL (CONTINUED)

Element	Cd	Description
Central Vac	1	YES
Basement Floor	12	CONCRETE
Bsmt Garage		
Units	1	

MIXED USE

Code	Description	Percentage
101	ONE FAM	100
		0
		0

COST / MARKET VALUATION

Adj Base Rate	102.62
RCN	930,064
Net Other Adj	
Year Built	1994
Effective Year Built	2008
Depreciation Code	GD
Remodel Rating	
Year Remodeled	
Depreciation %	17
Functional Obsol	
External Obsol	
Cost Trend Factor	1
Condition	
% Complete	
Overall % Condition	83
RCNLD	772,000
Dep % Ovr	
Dep Ovr Comment	
Misc Imp Ovr	
Misc Imp Ovr Comment	
Cost to Cure Ovr	
Cost to Cure Ovr Comment	

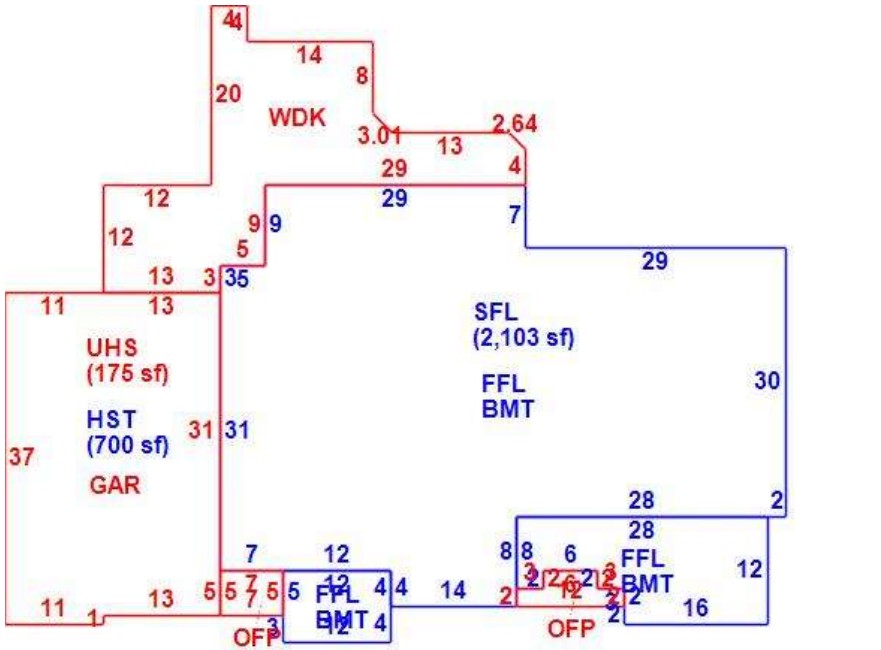

OB - OUTBUILDING & YARD ITEMS(L) / XF - BUILDING EXTRA FEATURES(B)

Code	Description	Su	Sub Type	Lan	Units	Unit Price	Yr Blt	%	Dep.	Cond	Gra	Qual	Apprais Va
11	POOL I-V	OB	Outbuildi	L	512	29.00	1995	70	0.00	GD	A	1.00	10,400
GEN	GENERATO			B	1	0.00	2004	83	1.00	AV	A	1.00	0

BUILDING SUB-AREA SUMMARY SECTION

Subarea	Description	Living	Gross	Eff Area	Unit Cost	Undeprec Value
BMT	BASEMENT	0	2,709		29.84	80,849
FFL	1ST FLOOR	2,709	2,709		149.17	404,097
GAR	GARAGE	0	875		59.67	52,209
HST	HALF STORY	350	700		74.58	52,209
OFP	OPEN PORCH	0	71		14.71	1,044
SFL	2ND FLOOR	2,103	2,103		149.17	313,701
UHS	UNFIN HALF STORY	0	175		45.18	7,906
WDK	WOOD DECK	0	605		29.83	18,049
	Ttl Gross Liv / Lease Area	5,162	9,947			930,064