Property Location 5 GLYNN FARMS DR | Map ID 50/ 28/ 6/ / | Bldg Name | State Use 101
Vision ID 4101 | Account # 4168 | Bldg # 1 | Sec # 1 of 1 | Card # 1 of 1 | Print Date 11-21-2025 8:40:07 A

CURRENT OWNER	TOPO TYPE	UTILITY	STREET	LOCATION
KULLA STEVEN N				
KULLA KELLY J	TOPO WET	EASEMENT	TRAFFIC	CORNER
5 GLYNN FARMS DR	DRAINAGE		VIEW	COMMUNITY
EAST LONGMEADOW MA 01028				

SUPPLEMENTAL DATA

Alt Prcl ID	Received
SP Permit	NIA
Chapter Land	Field 8
OC Dates	Field 9
In+Ex FY	Field 10
Mailed	Assoc Pid#

GIS ID F_385887_2850124

CURRENT ASSESSMENT

Description	Code	Appraised	Assessed
RESIDNTL.	101	396800	396,800
RES LAND	101	141200	141,200
Total		538,000	538,000

1006

EAST LONGMEADOW

RECORD OF OWNERSHIP

	BK-VOL/PAGE		SALE DATE	Q/U	V/I	SALE PRICE	VC
KULLA STEVEN N	18922	0365	09-21-2011	U	I	315,500	
DE ANGELO JOSEPH P ,	09374	0059	01-26-1996	U	I	197,000	
FOLEY MICHAEL E	08925	0189	08-26-1994	U	I	175,000	1A
MORELLI NEIL J +	05677	0142	08-31-1984	U	I	30	

PREVIOUS ASSESSMENTS (HISTORY)

Year	Code	Assessed	Year	Code	Assessed	Year	Code	Assessed
2025	101	360,000	2024	101	336,700	2023	101	308,700
	101	141,200		101	141,200		101	128,800
	Total	501,200		Total	477,900		Total	437,500

EXEMPTIONS

Year	Code	Description	Amount
		Total	

OTHER ASSESSMENTS

Code	Description	YEAR	Amount	Comm Int

This signature acknowledges a visit by a Data Collector or Assessor

ASSESSING NEIGHBORHOOD

Nbhd	Nbhd Name		Tracing	Batch
0001			101	NV

NOTES

APPRAISED VALUE SUMMARY

Appraised BLDG. Value (Card)	396,800
Appraised Xf (B) Value (Bldg)	0
Appraised Ob (B) Value (Bldg)	0
Appraised Land Value (Bldg)	141,200
Special Land Value	0
Total Appraised Parcel Value	538,000
Valuation Method	C
Adjustment	
Net Total Appraised Parcel Value	538,000

BUILDING PERMIT RECORD

Permit Id	Issue Date	Type	Description	Amount	Insp Date	% Comp	Date Comp	Comments
201303175	12-19-2013	9	ALTERATION	11,671	04-28-2014	100	04-28-2014	
206	01-01-1985	MN	Manual Note					SFR

VISIT / CHANGE HISTORY

Date	Type	Is	Id	Cd	Purpose/Result
04-28-2014			105	15	PERMIT VISIT
01-20-2012			317	16	FIELDREV CHG
12-09-2011			317	14	INSPECTED
09-25-2009			317	14	INSPECTED
09-04-2009			375	2	MEASURED
06-20-2002			274	3	MEAS+INSPCTD
03-26-1992			170	3	MEAS+INSPCTD

LAND LINE VALUATION SECTION

B	Use Co	Description	Zone	D	Fronta	Depth	Land Units		Unit Price	I. Fact	S.A.	Ac Di	C. Fact	St. Idx	Adj	Notes	Special Pricing				Size A	Adj Unit Pric	Land Value
1	101	ONE FAM	RAA				40,000	SF	3.12	1.250	9	LAND	1.00	NV	1.00			0	TRF1	0.9	1.000	3.51	140,400
1	101	ONE FAM	RAA				0.110	AC	7,000.00	1.000	0		1.00	NV	1.00			0			1.000	7,000	800
						Total Card Land Units	1.03	AC	Parcel Total Land Area:	1.03												Total Land Value	141,200

Property Location 5 GLYNN FARMS DR | Map ID 50/ 28/ 6/ / | Bldg Name | State Use 101
Vision ID 4101 | Account # 4168 | Bldg # 1 | Sec # 1 of 1 | Card # 1 of 1 | Print Date 11-21-2025 8:40:07 A

CONSTRUCTION DETAIL

Element	Cd	Description
Style	05	CAPE
Model	01	RESIDENTIAL
Grade	B-	GOOD (-)
Stories	2.00	2 STORY
Foundation	1	CONCRETE
Exterior Wall 1	2	CLAPBOARD
Exterior Wall 2		
Roof Structure	1	GABLE
Roof Cover	1	ASPHALT SH
Interior Wall 1	1	DRYWALL
Interior Wall 2		
Interior Floor 1	3	HARDWOOD
Interior Floor 2		
Heat Fuel	2	GAS
Heat Type	1	FORCED H/A
AC Type	03	FULL
Bedrooms	4	
Full Baths	3	
Half Baths	1	
Extra Fixtures	0	
Total Rooms	8	
Bath Style	A	AVERAGE
Half Bath Style	A	AVERAGE
Kitchens	1	
Kitchen Style	A	AVERAGE
Extra Kitchens	0	
Extra Kitchen St		
FBM Sqft		
FBM Quality		
FIN ATC Sqft		
FIN ATC Quality		
Fireplaces	1	
WS Flues		

CONSTRUCTION DETAIL (CONTINUED)

Element	Cd	Description
Central Vac	0	NO
Basement Floor	12	CONCRETE
Bsmt Garage		
Units	1	

MIXED USE

Code	Description	Percentage
101	ONE FAM	100
		0
		0

COST / MARKET VALUATION

Adj Base Rate	136.15
RCN	508,741
Net Other Adj	
Year Built	1985
Effective Year Built	2003
Depreciation Code	GD
Remodel Rating	
Year Remodeled	
Depreciation %	22
Functional Obsol	
External Obsol	
Cost Trend Factor	1
Condition	
% Complete	
Overall % Condition	78
RCNLD	396,800
Dep % Ovr	
Dep Ovr Comment	
Misc Imp Ovr	
Misc Imp Ovr Comment	
Cost to Cure Ovr	
Cost to Cure Ovr Comment	

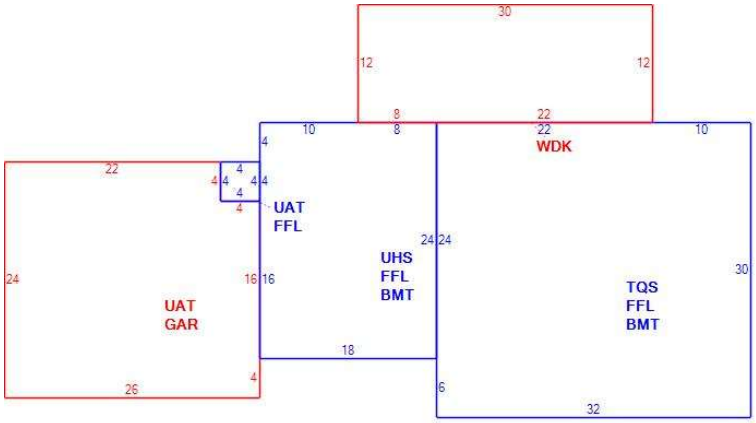

OB - OUTBUILDING & YARD ITEMS(L) / XF - BUILDING EXTRA FEATURES(B)

Code	Description	Su	Sub Type	Lan	Units	Unit Price	Yr Blt	%	Dep.	Cond	Gra	Qual	Apprais Va

BUILDING SUB-AREA SUMMARY SECTION

Subarea	Description	Living	Gross	Eff Area	Unit Cost	Undeprec Value
BMT	BASEMENT	0	1,392		34.14	47,524
FFL	1ST FLOOR	1,408	1,408		170.95	240,695
GAR	GARAGE	0	608		68.32	41,540
TQS	3/4 STORY	720	960		128.21	123,082
UAT	UNFIN ATTC	0	624		34.24	21,368
UHS	UNFIN HALF STORY	0	432		51.44	22,223
WDK	WOOD DECK	0	360		34.19	12,308
	Ttl Gross Liv / Lease Area	2,128	5,784			508,741