Property Location 6 CRESTVIEW RD | Map ID 57/ 24/ 20/ / | Bldg Name | State Use 101
Vision ID 4341 | Account # 4410 | Bldg # 1 | Sec # 1 of 1 | Card # 1 of 1 | Print Date 11-21-2025 9:15:21 A

CURRENT OWNER	TOPO TYPE	UTILITY	STREET	LOCATION
DUONG CHIEN T TR				
DUONG ANNA T TR	TOPO WET	EASEMENT	TRAFFIC	CORNER
6 CRESTVIEW RD	DRAINAGE		VIEW	COMMUNITY
EAST LONGMEADOW MA 01028				

GIS ID F_387270_2839839

SUPPLEMENTAL DATA

Alt Prcl ID	Received
SP Permit	NIA
Chapter Land	Field 8
OC Dates	Field 9
In+Ex FY	Field 10
Mailed	Assoc Pid#

CURRENT ASSESSMENT

Description	Code	Appraised	Assessed
RESIDNTL.	101	732100	732,100
RES LAND	101	156400	156,400
RESIDNTL.	101	15800	15,800
Total		904,300	904,300

1006
EAST LONGMEADOW

RECORD OF OWNERSHIP

	BK-VOL/PAGE		SALE DATE	Q/U	V/I	SALE PRICE	VC
DUONG CHIEN T TR	24131	131	09-20-2021	U	I	1	1A
DUONG CHIEN T	18854	0058	07-25-2011	U	I	100	1A
DUONG CHIEN T,	17935	0466	08-12-2009	U	I	749,000	
SHOOLTZ,DUANE E	10965	0376	10-15-1999	U	V	435,000	
MAZZELLA,RICHARD J	10965	0374	10-15-1999	U	V	100	1F

PREVIOUS ASSESSMENTS (HISTORY)

Year	Code	Assessed	Year	Code	Assessed	Year	Code	Assessed
2025	101	666,000	2024	101	616,400	2023	101	573,100
	101	156,400		101	156,400		101	142,400
	101	15,800		101	15,800		101	15,800
	Total	838,200		Total	788,600		Total	731,300

EXEMPTIONS

Year	Code	Description	Amount
		Total	

OTHER ASSESSMENTS

Code	Description	YEAR	Amount	Comm Int

This signature acknowledges a visit by a Data Collector or Assessor

ASSESSING NEIGHBORHOOD

Nbhd	Nbhd Name		Tracing	Batch
0001			101	NV

NOTES

SUB DIV #588,589

APPRAISED VALUE SUMMARY

Appraised BLDG. Value (Card)	732,100
Appraised Xf (B) Value (Bldg)	0
Appraised Ob (B) Value (Bldg)	15,800
Appraised Land Value (Bldg)	156,400
Special Land Value	0
Total Appraised Parcel Value	904,300
Valuation Method	C
Adjustment	
Net Total Appraised Parcel Value	904,300

BUILDING PERMIT RECORD

Permit Id	Issue Date	Type	Description	Amount	Insp Date	% Comp	Date Comp	Comments
201203389	11-01-2012	GEN	GENERATOR	10,000				
317	11-20-2003	38	POOL HOUSE	3,500				
241	09-24-2003	11	POOL	20,000				
299	12-04-1995	2	DWELLING	200,000		0		DWELLING

VISIT / CHANGE HISTORY

Date	Type	Is	Id	Cd	Purpose/Result
07-10-2019			334	2	MEASURED
06-07-2013			317	15	PERMIT VISIT
02-19-2009			250	P3	ENTRY DENIED
10-24-2008			317	2	MEASURED
02-29-2008			317	15	PERMIT VISIT
03-02-2007			250	1	LEFT NOTICE
01-10-2005			311	15	PERMIT VISIT

LAND LINE VALUATION SECTION

B	Use Co	Description	Zone	D	Fronta	Depth	Land Units		Unit Price	I. Fact	S.A.	Ac Di	C. Fact	St. Idx	Adj	Notes	Special Pricing				Size A	Adj Unit Pric	Land Value
1	101	ONE FAM	RAA				40,000	SF	3.12	1.250	9	LAND	1.00	NV	1.00			0			1.000	3.9	156,000
1	101	ONE FAM	RAA				0.050	AC	7,000.00	1.000	0		1.00	NV	1.00			0			1.000	7,000	400
						Total Card Land Units	0.97	AC	Parcel Total Land Area:	0.97												Total Land Value	156,400

Property Location 6 CRESTVIEW RD | Map ID 57/ 24/ 20/ / | Bldg Name | State Use 101
Vision ID 4341 | Account # 4410 | Bldg # 1 | Sec # 1 of 1 | Card # 1 of 1 | Print Date 11-21-2025 9:15:21 A

CONSTRUCTION DETAIL

Element	Cd	Description
Style	09	CONTEMPORY
Model	01	RESIDENTIAL
Grade	B+	GOOD (+)
Stories	2.00	2 STORY
Foundation	1	CONCRETE
Exterior Wall 1	4	VINYL
Exterior Wall 2	8	BRICK VENR
Roof Structure	2	HIP
Roof Cover	1	ASPHALT SH
Interior Wall 1	1	DRYWALL
Interior Wall 2		
Interior Floor 1	3	HARDWOOD
Interior Floor 2	6	CERAMIC TL
Heat Fuel	2	GAS
Heat Type	1	FORCED H/A
AC Type	03	FULL
Bedrooms	5	
Full Baths	3	
Half Baths	1	
Extra Fixtures	2	
Total Rooms	10	
Bath Style	V	VERY GOOD
Half Bath Style	V	VERY GOOD
Kitchens	1	
Kitchen Style	V	V GOOD
Extra Kitchens	0	
Extra Kitchen St		
FBM Sqft	1084	
FBM Quality	5	
FIN ATC Sqft		
FIN ATC Quality		
Fireplaces	1	
WS Flues		

CONSTRUCTION DETAIL (CONTINUED)

Element	Cd	Description
Central Vac	0	NO
Basement Floor	12	CONCRETE
Bsmt Garage		
Units	1	

MIXED USE

Code	Description	Percentage
101	ONE FAM	100
		0
		0

COST / MARKET VALUATION

Adj Base Rate	106.74
RCN	804,553
Net Other Adj	
Year Built	1996
Effective Year Built	2016
Depreciation Code	VG
Remodel Rating	
Year Remodeled	
Depreciation %	9
Functional Obsol	
External Obsol	
Cost Trend Factor	1
Condition	
% Complete	
Overall % Condition	91
RCNLD	732,100
Dep % Ovr	
Dep Ovr Comment	
Misc Imp Ovr	
Misc Imp Ovr Comment	
Cost to Cure Ovr	
Cost to Cure Ovr Comment	

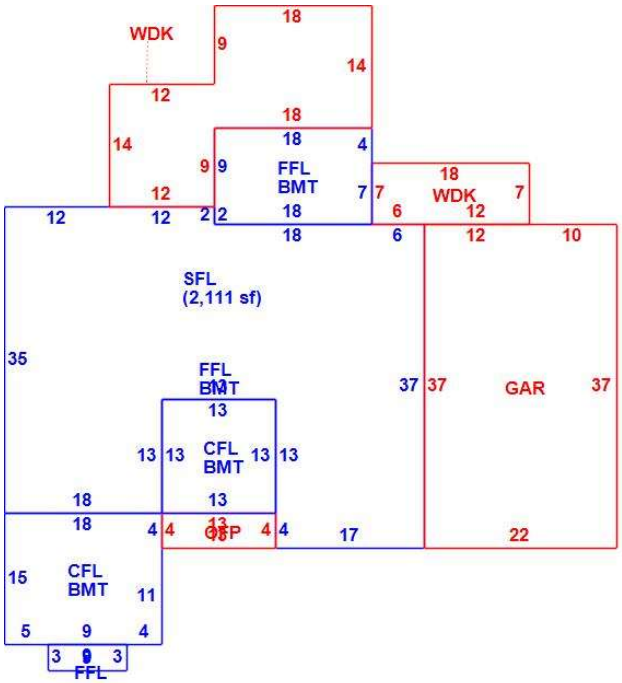

OB - OUTBUILDING & YARD ITEMS(L) / XF - BUILDING EXTRA FEATURES(B)

Code	Description	Su	Sub Type	Lan	Units	Unit Price	Yr Blt	%	Dep.	Cond	Gra	Qual	Apprais Va
23	POOL HSE			L	168	36.80	2004	70	0.00	GD	G	1.25	5,400
11	POOL I-V	OB	Outbuildi	L	512	29.00	2004	70	0.00	GD	A	1.00	10,400
GEN	GENERATO			B	1	0.00	2010	91	1.00	AV	A	1.00	0

BUILDING SUB-AREA SUMMARY SECTION

Subarea	Description	Living	Gross	Eff Area	Unit Cost	Undeprec Value
BMT	BASEMENT	0	2,168		31.01	67,240
CFL	CATHEDRAL CE	439	439		159.52	70,028
FFL	1ST FLOOR	1,756	1,756		154.93	272,058
GAR	GARAGE	0	814		62.05	50,507
OFP	OPEN PORCH	0	52		14.90	775
SFL	2ND FLOOR	2,111	2,111		154.93	327,058
WDK	WOOD DECK	0	546		30.93	16,887
	Ttl Gross Liv / Lease Area	4,306	7,886			804,553