Property Location 53 GREENWICH RD | Map ID 59/ 38/ A/ / | Bldg Name | State Use 101
Vision ID 4466 | Account # 4538 | Bldg # 1 | Sec # 1 of 1 | Card # 1 of 1 | Print Date 11-21-2025 9:34:00 A

CURRENT OWNER	TOPO TYPE	UTILITY	STREET	LOCATION
BROWN DOREEN A NORMAND TR				
	TOPO WET	EASEMENT	TRAFFIC	CORNER
53 GREENWICH RD				
	DRAINAGE		VIEW	COMMUNITY
EAST LONGMEADOW MA 01028				

GIS ID F_388649_2856576

SUPPLEMENTAL DATA

Alt Prcl ID	Received
SP Permit	NIA
Chapter Land	Field 8
OC Dates	Field 9
In+Ex FY	Field 10
Mailed	Assoc Pid#

CURRENT ASSESSMENT

Description	Code	Appraised	Assessed
RESIDNTL.	101	352600	352,600
RES LAND	101	147300	147,300
Total		499,900	499,900

1006

EAST LONGMEADOW

RECORD OF OWNERSHIP

	BK-VOL/PAGE		SALE DATE	Q/U	V/I	SALE PRICE	VC
BROWN DOREEN A NORMAND TR	21818	0144	08-17-2017	U	I	100	1A
BROWN EDWARD B	09237	0001	09-01-1995	U	I	203,500	
ADELETTI DONALD F + JANET	08572	0524	09-27-1993	U	I	1	1A
ADELETTI JANET A	08505	0150	07-28-1993	U	I	1	1A
ADELETTI DONALD F + JANET	04348	0093	11-12-1976	U	I	0	

PREVIOUS ASSESSMENTS (HISTORY)

Year	Code	Assessed	Year	Code	Assessed	Year	Code	Assessed
2025	101	329,000	2024	101	303,300	2023	101	277,600
	101	147,300		101	147,300		101	133,900
	Total	476,300		Total	450,600		Total	411,500

EXEMPTIONS

Year	Code	Description	Amount
		Total	

OTHER ASSESSMENTS

Code	Description	YEAR	Amount	Comm Int

This signature acknowledges a visit by a Data Collector or Assessor

APPRAISED VALUE SUMMARY

Appraised BLDG. Value (Card)	352,600
Appraised Xf (B) Value (Bldg)	0
Appraised Ob (B) Value (Bldg)	0
Appraised Land Value (Bldg)	147,300
Special Land Value	0
Total Appraised Parcel Value	499,900
Valuation Method	C
Adjustment	
Net Total Appraised Parcel Value	499,900

ASSESSING NEIGHBORHOOD

Nbhd	Nbhd Name		Tracing	Batch
0001			101	NV

NOTES

BUILDING PERMIT RECORD

Permit Id	Issue Date	Type	Description	Amount	Insp Date	% Comp	Date Comp	Comments
137	06-29-1998	11	POOL	6,500				

VISIT / CHANGE HISTORY

Date	Type	Is	Id	Cd	Purpose/Result
05-18-2018			333	2	MEASURED
07-11-2008			317	14	INSPECTED
06-20-2008			317	2	MEASURED
04-18-2002			274	14	INSPECTED
03-22-2002			250	22	MAILER SENT
11-13-2001			247	2	MEASURED
02-11-1999			247	15	PERMIT VISIT

LAND LINE VALUATION SECTION

B	Use Co	Description	Zone	D	Fronta	Depth	Land Units		Unit Price	I. Fact	S.A.	Ac Di	C. Fact	St. Idx	Adj	Notes	Special Pricing				Size A	Adj Unit Pric	Land Value
1	101	ONE FAM	RA				25,128	SF	4.69	1.250	9	LAND	1.00	NV	1.00			0			1.000	5.86	147,300
						Total Card Land Units	0.58	AC	Parcel Total Land Area:			0.58										Total Land Value	147,300

Property Location 53 GREENWICH RD | Map ID 59/ 38/ A/ / | Bldg Name | State Use 101
Vision ID 4466 | Account # 4538 | Bldg # 1 | Sec # 1 of 1 | Card # 1 of 1 | Print Date 11-21-2025 9:34:00 A

CONSTRUCTION DETAIL

Element	Cd	Description
Style	06	COLONIAL
Model	01	RESIDENTIAL
Grade	C+	AVG. (+)
Stories	2.00	2 STORY
Foundation	1	CONCRETE
Exterior Wall 1	4	VINYL
Exterior Wall 2		
Roof Structure	1	GABLE
Roof Cover	1	ASPHALT SH
Interior Wall 1	1	DRYWALL
Interior Wall 2		
Interior Floor 1	4	CARPET
Interior Floor 2	3	HARDWOOD
Heat Fuel	1	OIL
Heat Type	1	FORCED H/A
AC Type	01	NONE
Bedrooms	5	
Full Baths	2	
Half Baths	0	
Extra Fixtures	1	
Total Rooms	10	
Bath Style	A	AVERAGE
Half Bath Style		
Kitchens	1	
Kitchen Style	G	GOOD
Extra Kitchens	0	
Extra Kitchen St		
FBM Sqft		
FBM Quality		
FIN ATC Sqft		
FIN ATC Quality		
Fireplaces	1	
WS Flues		

CONSTRUCTION DETAIL (CONTINUED)

Element	Cd	Description
Central Vac	1	YES
Basement Floor	12	CONCRETE
Bsmt Garage	2	
Units	1	

MIXED USE

Code	Description	Percentage
101	ONE FAM	100
		0
		0

COST / MARKET VALUATION

Adj Base Rate	124.14
RCN	503,751
Net Other Adj	
Year Built	1970
Effective Year Built	1995
Depreciation Code	GD
Remodel Rating	
Year Remodeled	
Depreciation %	30
Functional Obsol	
External Obsol	
Cost Trend Factor	1
Condition	
% Complete	
Overall % Condition	70
RCNLD	352,600
Dep % Ovr	
Dep Ovr Comment	
Misc Imp Ovr	
Misc Imp Ovr Comment	
Cost to Cure Ovr	
Cost to Cure Ovr Comment	

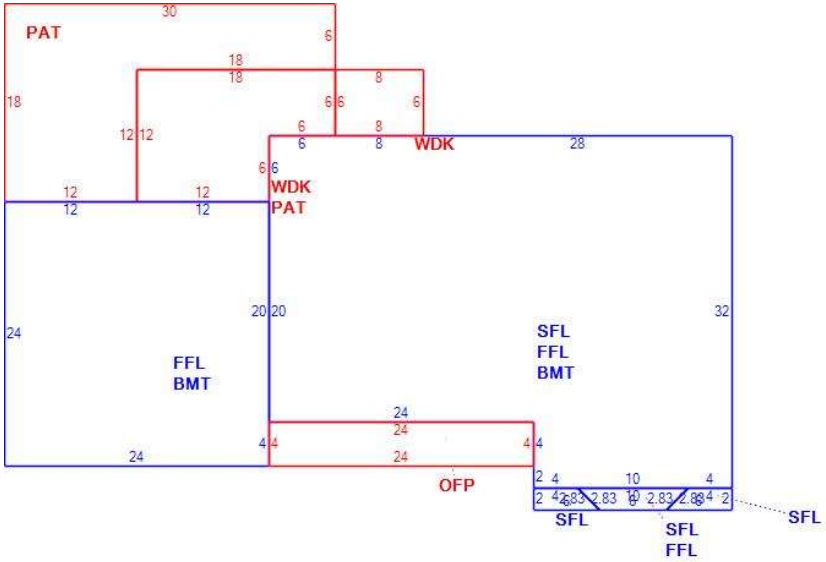

OB - OUTBUILDING & YARD ITEMS(L) / XF - BUILDING EXTRA FEATURES(B)

Code	Description	Su	Sub Type	Lan	Units	Unit Price	Yr Blt	%	Dep.	Cond	Gra	Qual	Apprais Va

BUILDING SUB-AREA SUMMARY SECTION

Subarea	Description	Living	Gross	Eff Area	Unit Cost	Undeprec Value
BMT	BASEMENT	0	1,776		29.07	51,626
FFL	1ST FLOOR	1,792	1,792		145.42	260,601
OFP	OPEN PORCH	0	96		15.15	1,454
PAT	PATIO	0	504		7.21	3,636
SFL	2ND FLOOR	1,236	1,236		145.42	179,745
WDK	WOOD DECK	0	228		29.34	6,690
	Ttl Gross Liv / Lease Area	3,028	5,632			503,751