Property Location 145 WESTWOOD AV | Map ID 15A/ 2/ 1/ / | Bldg Name | State Use 101
Vision ID 477 | Account # 488 | Bldg # 1 | Sec # 1 of 1 | Card # 1 of 1 | Print Date 11/17/2025 9:21:53 A

CURRENT OWNER	TOPO TYPE	UTILITY	STREET	LOCATION
LEVESQUE BRIAN J + CYNTHIA A				
LEVESQUE JENNELLE	TOPO WET	EASEMENT	TRAFFIC	CORNER
145 WESTWOOD AVE				
	DRAINAGE		VIEW	COMMUNITY
E LONGMEADOW MA 01028				

GIS ID F_377760_2851797

SUPPLEMENTAL DATA

Alt Prcl ID	Received
SP Permit	NIA
Chapter Land	Field 8
OC Dates	Field 9
In+Ex FY	Field 10
Mailed	Assoc Pid#

CURRENT ASSESSMENT

Description	Code	Appraised	Assessed
RESIDNTL.	101	350600	350,600
RES LAND	101	99700	99,700
Total		450,300	450,300

1006

EAST LONGMEADOW

RECORD OF OWNERSHIP

	BK-VOL/PAGE		SALE DATE	Q/U	V/I	SALE PRICE	VC
LEVESQUE BRIAN J + CYNTHIA A	15790	0028	03-24-2006	U	I	100	1A
LEVESQUE,CYNTHIA A	14316	0537	06-04-2004	U	V	80,000	
LEVESQUE,CYNTHIA A	BK-10	0000	12-31-1997	U	V	1	1A
STELLATO THERESA,	04549	0049	02-03-1978	U	V	0	

PREVIOUS ASSESSMENTS (HISTORY)

Year	Code	Assessed	Year	Code	Assessed	Year	Code	Assessed
2025	101	318,100	2024	101	297,500	2023	101	273,400
	101	99,700		101	99,700		101	90,600
	Total	417,800		Total	397,200		Total	364,000

EXEMPTIONS

Year	Code	Description	Amount
		Total	

OTHER ASSESSMENTS

Code	Description	YEAR	Amount	Comm Int

This signature acknowledges a visit by a Data Collector or Assessor

ASSESSING NEIGHBORHOOD

Nbhd	Nbhd Name		Tracing	Batch
0001			101	MA

NOTES

APPRAISED VALUE SUMMARY

Appraised BLDG. Value (Card)	350,600
Appraised Xf (B) Value (Bldg)	0
Appraised Ob (B) Value (Bldg)	0
Appraised Land Value (Bldg)	99,700
Special Land Value	0
Total Appraised Parcel Value	450,300
Valuation Method	C
Adjustment	
Net Total Appraised Parcel Value	450,300

BUILDING PERMIT RECORD

Permit Id	Issue Date	Type	Description	Amount	Insp Date	% Comp	Date Comp	Comments
185	07-13-2004	2	DWELLING	177,698				OC 12/20/2004

VISIT / CHANGE HISTORY

Date	Type	Is	Id	Cd	Purpose/Result
04-09-2025			334	2	MEASURED
03-23-2018			333	2	MEASURED
03-23-2006			311	16	FIELDREV CHG
12-20-2004			311	3	MEAS+INSPCTD
06-27-1980			500	14	INSPECTED

LAND LINE VALUATION SECTION

B	Use Co	Description	Zone	D	Fronta	Depth	Land Units		Unit Price	I. Fact	S.A.	Ac Di	C. Fact	St. Idx	Adj	Notes	Special Pricing				Size A	Adj Unit Pric	Land Value
1	101	ONE FAM	RC				10,000	SF	11.08	1.000	5	LAND	1.00	MA	1.00			0	TRF2	0.9	1.000	9.97	99,700
						Total Card Land Units	0.23	AC	Parcel Total Land Area:	0.23												Total Land Value	99,700

Property Location 145 WESTWOOD AV | Map ID 15A/ 2/ 1/ / | Bldg Name | State Use 101
Vision ID 477 | Account # 488 | Bldg # 1 | Sec # 1 of 1 | Card # 1 of 1 | Print Date 11/17/2025 9:21:54 A

CONSTRUCTION DETAIL

Element	Cd	Description
Style	19	RANCH
Model	01	RESIDENTIAL
Grade	C+	AVG. (+)
Stories	1.00	1 STORY
Foundation	1	CONCRETE
Exterior Wall 1	4	VINYL
Exterior Wall 2		
Roof Structure	1	GABLE
Roof Cover	1	ASPHALT SH
Interior Wall 1	1	DRYWALL
Interior Wall 2		
Interior Floor 1	3	HARDWOOD
Interior Floor 2	4	CARPET
Heat Fuel	2	GAS
Heat Type	1	FORCED H/A
AC Type	03	FULL
Bedrooms	3	
Full Baths	2	
Half Baths	0	
Extra Fixtures	1	
Total Rooms	5	
Bath Style	G	GOOD
Half Bath Style		
Kitchens	1	
Kitchen Style	G	GOOD
Extra Kitchens	0	
Extra Kitchen St		
FBM Sqft		
FBM Quality		
FIN ATC Sqft		
FIN ATC Quality		
Fireplaces	2	
WS Flues		

CONSTRUCTION DETAIL (CONTINUED)

Element	Cd	Description
Central Vac	0	NO
Basement Floor	12	CONCRETE
Bsmt Garage		
Units	1	

MIXED USE

Code	Description	Percentage
101	ONE FAM	100
		0
		0

COST / MARKET VALUATION

Adj Base Rate	148.02
RCN	393,941
Net Other Adj	
Year Built	2004
Effective Year Built	2014
Depreciation Code	GD
Remodel Rating	
Year Remodeled	
Depreciation %	11
Functional Obsol	
External Obsol	
Cost Trend Factor	1
Condition	
% Complete	
Overall % Condition	89
RCNLD	350,600
Dep % Ovr	
Dep Ovr Comment	
Misc Imp Ovr	
Misc Imp Ovr Comment	
Cost to Cure Ovr	
Cost to Cure Ovr Comment	

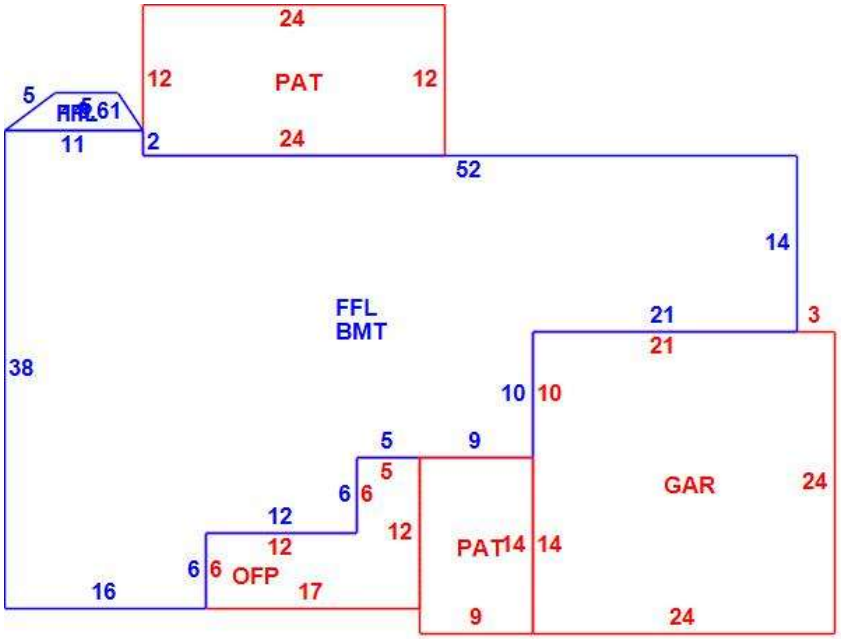

OB - OUTBUILDING & YARD ITEMS(L) / XF - BUILDING EXTRA FEATURES(B)

Code	Description	Su	Sub Type	Lan	Units	Unit Price	Yr Blt	%	Dep.	Cond	Gra	Qual	Apprais Va

BUILDING SUB-AREA SUMMARY SECTION

Subarea	Description	Living	Gross	Eff Area	Unit Cost	Undeprec Value
BMT	BASEMENT	0	1,588		35.96	57,098
FFL	1ST FLOOR	1,612	1,612		179.55	289,441
GAR	GARAGE	0	576		71.70	41,297
OFP	OPEN PORCH	0	132		17.68	2,334
PAT	PATIO	0	414		9.11	3,771
	Ttl Gross Liv / Lease Area	1,612	4,322			393,941