Property Location 71 STONEHILL RD | Map ID 64/ 2/ 12/ / | Bldg Name | State Use 101
Vision ID 4874 | Account # 4949 | Bldg # 1 | Sec # 1 of 1 | Card # 1 of 1 | Print Date 11/22/2025 7:31:25 A

CURRENT OWNER	TOPO TYPE	UTILITY	STREET	LOCATION
SHEA TIMOTHY S				
SHEA JESSICA	TOPO WET	EASEMENT	TRAFFIC	CORNER
71 STONEHILL RD	DRAINAGE		VIEW	COMMUNITY
EAST LONGMEADOW MA 01028				

GIS ID F_390254_2847733

SUPPLEMENTAL DATA

Alt Prcl ID	Received
SP Permit	NIA
Chapter Land	Field 8
OC Dates	Field 9
In+Ex FY	Field 10
Mailed	Assoc Pid#

CURRENT ASSESSMENT

Description	Code	Appraised	Assessed
RESIDNTL.	101	504600	504,600
RES LAND	101	158200	158,200
RESIDNTL.	101	32800	32,800
Total		695,600	695,600

1006
EAST LONGMEADOW

RECORD OF OWNERSHIP

	BK-VOL/PAGE		SALE DATE	Q/U	V/I	SALE PRICE	VC
SHEA TIMOTHY S	38623	LC	11-15-2019	U	I	100	1A
SHEA TIMOTHY	36676	LC	12-31-2015	Q	I	370,000	00
LLOYD GARY T	25391	LC	04-18-2006	U	I	100	1A
LLOYD GARY T +,	LC02-	0000	02-05-1992	U	I	236,500	
SMITH GEORGE G + CATHY D	LC02-	0000	10-31-1989	U	I	286,000	

PREVIOUS ASSESSMENTS (HISTORY)

Year	Code	Assessed	Year	Code	Assessed	Year	Code	Assessed
2025	101	472,300	2024	101	434,400	2023	101	398,700
	101	158,200		101	158,200		101	144,200
	101	29,300		101	1,600		101	1,000
	Total	659,800		Total	594,200		Total	543,900

EXEMPTIONS

Year	Code	Description	Amount
		Total	

OTHER ASSESSMENTS

Code	Description	YEAR	Amount	Comm Int

This signature acknowledges a visit by a Data Collector or Assessor

ASSESSING NEIGHBORHOOD

Nbhd	Nbhd Name		Tracing	Batch
0001			101	NV

NOTES

APPRAISED VALUE SUMMARY

Appraised BLDG. Value (Card)	504,600
Appraised Xf (B) Value (Bldg)	0
Appraised Ob (B) Value (Bldg)	32,800
Appraised Land Value (Bldg)	158,200
Special Land Value	0
Total Appraised Parcel Value	695,600
Valuation Method	C
Adjustment	
Net Total Appraised Parcel Value	695,600

BUILDING PERMIT RECORD

Permit Id	Issue Date	Type	Description	Amount	Insp Date	% Comp	Date Comp	Comments
B-23-861	12-07-2023	11	POOL	36,000	06-07-2024	100		18X36 IG
B-23-597	08-22-2023	9	ALTERATION	30,000	06-07-2024	100	12-15-2023	FINISH BMT 450 SQ
202000066	01-06-2020	4	ADDITION	195,254	06-24-2020	100	06-24-2020	CONSTRUCT 12X3
23	02-01-1987	MN	Manual Note	150,000				SFR

VISIT / CHANGE HISTORY

Date	Type	Is	Id	Cd	Purpose/Result
05-28-2025			450	15	PERMIT VISIT
06-07-2024			334	15	PERMIT VISIT
06-24-2020			334	15	PERMIT VISIT
06-27-2018			333	2	MEASURED
06-21-2007			311	14	INSPECTED
05-31-2007			311	2	MEASURED
05-31-2000			247	14	INSPECTED

LAND LINE VALUATION SECTION

B	Use Co	Description	Zone	D	Fronta	Depth	Land Units		Unit Price	I. Fact	S.A.	Ac Di	C. Fact	St. Idx	Adj	Notes	Special Pricing				Size A	Adj Unit Pric	Land Value
1	101	ONE FAM	RAA				40,000	SF	3.12	1.250	9	LAND	1.00	NV	1.00			0			1.000	3.9	156,000
1	101	ONE FAM	RAA				0.320	AC	7,000.00	1.000	0		1.00	NV	1.00			0			1.000	7,000	2,200
						Total Card Land Units	1.24	AC	Parcel Total Land Area:	1.24												Total Land Value	158,200

Property Location 71 STONEHILL RD | Map ID 64/ 2/ 12/ / | Bldg Name | State Use 101
Vision ID 4874 | Account # 4949 | Bldg # 1 | Sec # 1 of 1 | Card # 1 of 1 | Print Date 11/22/2025 7:31:25 A

CONSTRUCTION DETAIL

Element	Cd	Description
Style	06	COLONIAL
Model	01	RESIDENTIAL
Grade	B+	GOOD (+)
Stories	2.00	2 STORY
Foundation	1	CONCRETE
Exterior Wall 1	4	VINYL
Exterior Wall 2	8	BRICK VENR
Roof Structure	1	GABLE
Roof Cover	1	ASPHALT SH
Interior Wall 1	1	DRYWALL
Interior Wall 2		
Interior Floor 1	3	HARDWOOD
Interior Floor 2	4	CARPET
Heat Fuel	2	GAS
Heat Type	1	FORCED H/A
AC Type	03	FULL
Bedrooms	4	
Full Baths	3	
Half Baths	0	
Extra Fixtures	3	
Total Rooms	8	
Bath Style	G	GOOD
Half Bath Style	N	NONE
Kitchens	1	
Kitchen Style	G	GOOD
Extra Kitchens	0	
Extra Kitchen St	N	NONE
FBM Sqft	450	
FBM Quality	5	
FIN ATC Sqft		
FIN ATC Quality		
Fireplaces	1	
WS Flues	0	

CONSTRUCTION DETAIL (CONTINUED)

Element	Cd	Description
Central Vac	1	YES
Basement Floor	12	CONCRETE
Bsmt Garage	0	
Units	1	

MIXED USE

Code	Description	Percentage
101	ONE FAM	100
		0
		0

COST / MARKET VALUATION

Adj Base Rate	126.89
RCN	607,984
Net Other Adj	
Year Built	1987
Effective Year Built	2008
Depreciation Code	GV
Remodel Rating	
Year Remodeled	
Depreciation %	17
Functional Obsol	
External Obsol	
Cost Trend Factor	1
Condition	
% Complete	
Overall % Condition	83
RCNLD	504,600
Dep % Ovr	
Dep Ovr Comment	
Misc Imp Ovr	
Misc Imp Ovr Comment	
Cost to Cure Ovr	
Cost to Cure Ovr Comment	

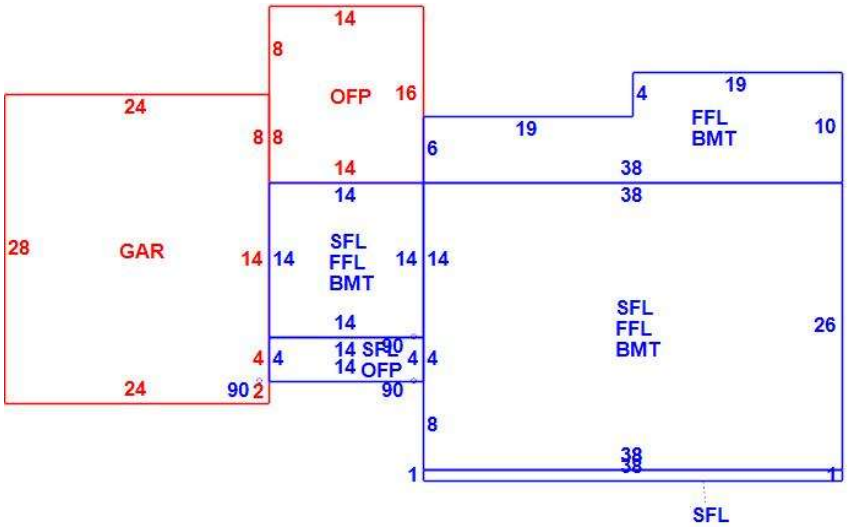

OB - OUTBUILDING & YARD ITEMS(L) / XF - BUILDING EXTRA FEATURES(B)

Code	Description	Su	Sub Type	Lan	Units	Unit Price	Yr Blt	%	Dep.	Cond	Gra	Qual	Apprais Va
02	SHED/FR			L	150	12.00	1998	70	0.00	GD	G	1.25	1,600
11	POOL I-V	OB	Outbuildi	L	684	29.00	2024	70	0.00	GD	G	1.25	17,400
02	SHED/FR			L	88	12.00	2024	60	0.00	AV	A	1.00	600
13	PORCH	OB	Outbuildi	L	88	12.00	2024	70	0.00	GD	G	1.25	900
19	PATIO			L	1,26	8.00	2021	70	0.00	GD	G	1.25	8,800
19	PATIO			L	732	8.00	2024	60	0.00	AV	A	1.00	3,500

BUILDING SUB-AREA SUMMARY SECTION

Subarea	Description	Living	Gross	Eff Area	Unit Cost	Undeprec Value
BMT	BASEMENT	0	1,488		36.23	53,906
FFL	1ST FLOOR	1,488	1,488		180.89	269,170
GAR	GARAGE	0	672		72.41	48,660
OFP	OPEN PORCH	0	280		18.09	5,065
SFL	2ND FLOOR	1,278	1,278		180.89	231,182
	Ttl Gross Liv / Lease Area	2,766	5,206			607,984