Property Location 28 WINDING BROOK LN | Map ID 72/ 37/ 13/ / | Bldg Name | State Use 101
Vision ID 5250 | Account # 5327 | Bldg # 1 | Sec # 1 of 1 | Card # 1 of 1 | Print Date 11/22/2025 8:41:18 A

CURRENT OWNER	TOPO TYPE	UTILITY	STREET	LOCATION
ESTANISLAU PETER				
ESTANISLAU CAROLYN J	TOPO WET	EASEMENT	TRAFFIC	CORNER
28 WINDING BROOK LANE	DRAINAGE		VIEW	COMMUNITY
EAST LONGMEADOW MA 01028				

SUPPLEMENTAL DATA

Alt Prcl ID	Received
SP Permit	NIA
Chapter Land	Field 8
OC Dates	Field 9
In+Ex FY	Field 10
Mailed	Assoc Pid#

GIS ID F_391398_2854391

CURRENT ASSESSMENT

Description	Code	Appraised	Assessed
RESIDNTL.	101	431000	431,000
RES LAND	101	156100	156,100
RESIDNTL.	101	6500	6,500
Total		593,600	593,600

1006
EAST LONGMEADOW

RECORD OF OWNERSHIP

	BK-VOL/PAGE		SALE DATE	Q/U	V/I	SALE PRICE	VC
ESTANISLAU PETER	08723	0098	01-24-1994	U	V	60,000	
WOODBRIDGE ESTATES INC	00000	0000		U		0	

PREVIOUS ASSESSMENTS (HISTORY)

Year	Code	Assessed	Year	Code	Assessed	Year	Code	Assessed
2025	101	390,300	2024	101	359,800	2023	101	337,200
	101	156,100		101	156,100		101	142,100
	101	4,300		101	4,300		101	3,800
	Total	550,700		Total	520,200		Total	483,100

EXEMPTIONS

Year	Code	Description	Amount
		Total	

OTHER ASSESSMENTS

Code	Description	YEAR	Amount	Comm Int

This signature acknowledges a visit by a Data Collector or Assessor

ASSESSING NEIGHBORHOOD

Nbhd	Nbhd Name		Tracing	Batch
0001			101	NV

NOTES

APPRAISED VALUE SUMMARY

Appraised BLDG. Value (Card)	431,000
Appraised Xf (B) Value (Bldg)	0
Appraised Ob (B) Value (Bldg)	6,500
Appraised Land Value (Bldg)	156,100
Special Land Value	0
Total Appraised Parcel Value	593,600
Valuation Method	C
Adjustment	
Net Total Appraised Parcel Value	593,600

BUILDING PERMIT RECORD

Permit Id	Issue Date	Type	Description	Amount	Insp Date	% Comp	Date Comp	Comments
B-24-505	08-07-2024	62	SOLAR	25,568		0		34 PANELS-UNSUR
B-24-454	07-18-2024	62	SOLAR	80,740	05-27-2025	100	08-03-2024	26 PANELS
89	05-24-1999	11	POOL	11,000				
81	04-01-1994	MN	Manual Note	120,000				DWELLING

VISIT / CHANGE HISTORY

Date	Type	Is	Id	Cd	Purpose/Result
05-27-2025			450	15	PERMIT VISIT
05-03-2018			333	4	INFO AT DOOR
09-14-2006			311	3	MEAS+INSPCTD
02-02-2000			250	22	MAILER SENT
01-12-2000			247	2	MEASURED
11-09-1999			247	15	PERMIT VISIT
12-31-1996			200	15	PERMIT VISIT

LAND LINE VALUATION SECTION

B	Use Co	Description	Zone	D	Fronta	Depth	Land Units		Unit Price	I. Fact	S.A.	Ac Di	C. Fact	St. Idx	Adj	Notes	Special Pricing				Size A	Adj Unit Pric	Land Value
1	101	ONE FAM	RA				40,000	SF	3.12	1.250	9	LAND	1.00	NV	1.00			0			1.000	3.9	156,000
1	101	ONE FAM	RA				0.010	AC	7,000.00	1.000	0		1.00	NV	1.00			0			1.000	7,000	100
						Total Card Land Units	0.93	AC	Parcel Total Land Area:	0.93												Total Land Value	156,100

Property Location 28 WINDING BROOK LN | Map ID 72/ 37/ 13/ / | Bldg Name | State Use 101
Vision ID 5250 | Account # 5327 | Bldg # 1 | Sec # 1 of 1 | Card # 1 of 1 | Print Date 11/22/2025 8:41:19 A

CONSTRUCTION DETAIL

Element	Cd	Description
Style	19	RANCH
Model	01	RESIDENTIAL
Grade	C+	AVG. (+)
Stories	1.00	1 STORY
Foundation	1	CONCRETE
Exterior Wall 1	2	CLAPBOARD
Exterior Wall 2	8	BRICK VENR
Roof Structure	2	HIP
Roof Cover	1	ASPHALT SH
Interior Wall 1	1	DRYWALL
Interior Wall 2		
Interior Floor 1	4	CARPET
Interior Floor 2	3	HARDWOOD
Heat Fuel	2	GAS
Heat Type	3	FORCED H/W
AC Type	03	FULL
Bedrooms	3	
Full Baths	2	
Half Baths	0	
Extra Fixtures	3	
Total Rooms	8	
Bath Style	A	AVERAGE
Half Bath Style		
Kitchens	1	
Kitchen Style	A	AVERAGE
Extra Kitchens	0	
Extra Kitchen St		
FBM Sqft		
FBM Quality		
FIN ATC Sqft		
FIN ATC Quality		
Fireplaces	0	
WS Flues	1	

CONSTRUCTION DETAIL (CONTINUED)

Element	Cd	Description
Central Vac	1	YES
Basement Floor		
Bsmt Garage		
Units	1	

MIXED USE

Code	Description	Percentage
101	ONE FAM	100
		0
		0

COST / MARKET VALUATION

Adj Base Rate	128.17
RCN	519,305
Net Other Adj	
Year Built	1994
Effective Year Built	2008
Depreciation Code	GD
Remodel Rating	
Year Remodeled	
Depreciation %	17
Functional Obsol	
External Obsol	
Cost Trend Factor	1
Condition	
% Complete	
Overall % Condition	83
RCNLD	431,000
Dep % Ovr	
Dep Ovr Comment	
Misc Imp Ovr	
Misc Imp Ovr Comment	
Cost to Cure Ovr	
Cost to Cure Ovr Comment	

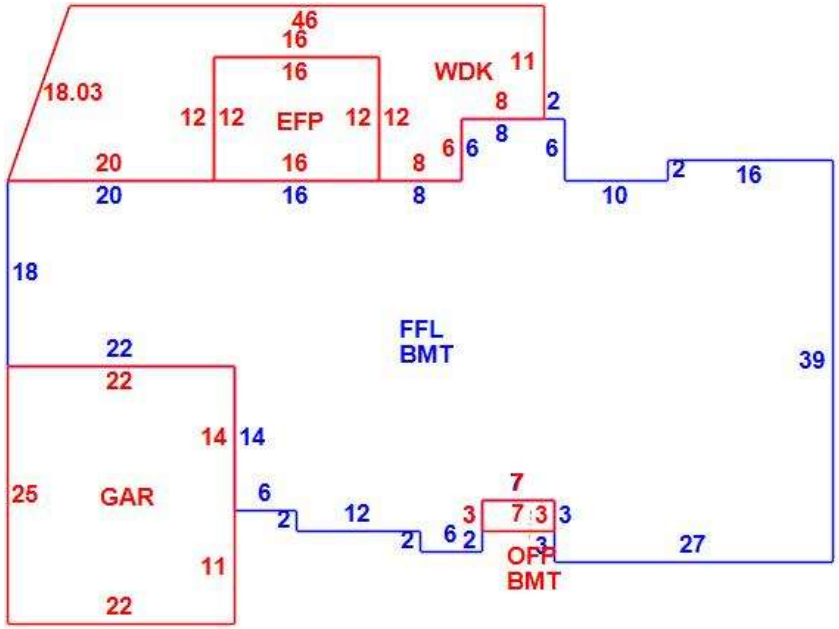

OB - OUTBUILDING & YARD ITEMS(L) / XF - BUILDING EXTRA FEATURES(B)

Code	Description	Su	Sub Type	Lan	Units	Unit Price	Yr Blt	%	Dep.	Cond	Gra	Qual	Apprais Va
09	POOL A-R	OB	Outbuildi	L	288	12.08	1999	70	0.00	GD	G	1.25	3,000
02	SHED/FR			L	120	12.00	2002	70	0.00	GD	G	1.25	1,300
SOL	Solar Panels	EX	Extra Fea	B	1	0.00	2025	83	1.00	AV	A	0.00	0
22	WOOD DK			L	96	15.00	2014	60	0.00	AV	A	1.00	900
22	WOOD DK			L	144	15.00	2014	60	0.00	AV	A	1.00	1,300

BUILDING SUB-AREA SUMMARY SECTION

Subarea	Description	Living	Gross	Eff Area	Unit Cost	Undeprec Value
BMT	BASEMENT	0	2,541		29.96	76,135
EFP	ENCL PORCH	0	192		74.94	14,388
FFL	1ST FLOOR	2,520	2,520		149.87	377,676
GAR	GARAGE	0	550		59.95	32,972
OFP	OPEN PORCH	0	21		14.27	300
WDK	WOOD DECK	0	593		30.08	17,835
	Ttl Gross Liv / Lease Area	2,520	6,417			519,305