Property Location 20 PEACHTREE RD | Map ID 74/ 6/ 10/ / | Bldg Name | State Use 101
Vision ID 5332 | Account # 5409 | Bldg # 1 | Sec # 1 of 1 | Card # 1 of 1 | Print Date 11/22/2025 8:53:35 A

CURRENT OWNER	TOPO TYPE	UTILITY	STREET	LOCATION
CARLOS JOSEPH M + BRIANA A				
	TOPO WET	EASEMENT	TRAFFIC	CORNER
20 PEACHTREE RD				
	DRAINAGE		VIEW	COMMUNITY
EAST LONGMEADOW MA 01028				

SUPPLEMENTAL DATA

Alt Prcl ID		Received	
SP Permit		NIA	
Chapter Land		Field 8	
OC Dates	5/11/2018	Field 9	
In+Ex FY		Field 10	
Mailed		Assoc Pid#	

GIS ID F_390800_2851493

CURRENT ASSESSMENT

Description	Code	Appraised	Assessed
RESIDNTL.	101	734400	734,400
RES LAND	101	162000	162,000
Total		896,400	896,400

1006
EAST LONGMEADOW

RECORD OF OWNERSHIP

	BK-VOL/PAGE		SALE DATE	Q/U	V/I	SALE PRICE	VC
CARLOS JOSEPH M + BRIANA A	20995	0460	12-18-2015	U	V	150,000	1P
CABOT REAL ESTATE LLC	14393	0495	08-05-2004	U	V	70,000	1
CABLE ,RUSSELL	11369	0569	10-13-2000	U	V	4,200	1E
TT TOWN OF EAST LONGMEADOW,	00000	0000	12-31-1940	U	I	0	

PREVIOUS ASSESSMENTS (HISTORY)

Year	Code	Assessed	Year	Code	Assessed	Year	Code	Assessed
2025	101	685,900	2024	101	632,900	2023	101	586,000
	101	162,000		101	162,000		101	148,000
	Total	847,900		Total	794,900		Total	734,000

EXEMPTIONS

Year	Code	Description	Amount
		Total	

OTHER ASSESSMENTS

Code	Description	YEAR	Amount	Comm Int

This signature acknowledges a visit by a Data Collector or Assessor

ASSESSING NEIGHBORHOOD

Nbhd	Nbhd Name		Tracing	Batch
0001			130	NV

NOTES

APPRAISED VALUE SUMMARY

Appraised BLDG. Value (Card)	734,400
Appraised Xf (B) Value (Bldg)	0
Appraised Ob (B) Value (Bldg)	0
Appraised Land Value (Bldg)	162,000
Special Land Value	0
Total Appraised Parcel Value	896,400
Valuation Method	C
Adjustment	
Net Total Appraised Parcel Value	896,400

BUILDING PERMIT RECORD

Permit Id	Issue Date	Type	Description	Amount	Insp Date	% Comp	Date Comp	Comments
201700182	02-01-2017	2	DWELLING	545,000	06-26-2017	75		3712 SF INC GARA

VISIT / CHANGE HISTORY

Date	Type	Is	Id	Cd	Purpose/Result
05-11-2018			400	25	OC VISIT
02-28-2018			333	15	PERMIT VISIT
06-26-2017			317	2	MEASURED
03-27-1981			500	14	INSPECTED

LAND LINE VALUATION SECTION

B	Use Co	Description	Zone	D	Fronta	Depth	Land Units		Unit Price	I. Fact	S.A.	Ac Di	C. Fact	St. Idx	Adj	Notes	Special Pricing				Size A	Adj Unit Pric	Land Value
1	101	ONE FAM	RA				40,000	SF	3.12	1.250	8	LAND	1.00	NG	1.00			0			1.000	3.9	156,000
1	101	ONE FAM	RA				0.850	AC	7,000.00	1.000	0		1.00	NG	1.00			0			1.000	7,000	6,000
						Total Card Land Units	1.77	AC	Parcel Total Land Area:	1.77												Total Land Value	162,000

Property Location 20 PEACHTREE RD | Map ID 74/ 6/ 10/ / | Bldg Name | State Use 101
Vision ID 5332 | Account # 5409 | Bldg # 1 | Sec # 1 of 1 | Card # 1 of 1 | Print Date 11/22/2025 8:53:35 A

CONSTRUCTION DETAIL

Element	Cd	Description
Style	06	COLONIAL
Model	01	RESIDENTIAL
Grade	A-	V GOOD-
Stories	2.00	2 STORY
Foundation	1	CONCRETE
Exterior Wall 1	4	VINYL
Exterior Wall 2	16	STONE VENR
Roof Structure	1	GABLE
Roof Cover	1	ASPHALT SH
Interior Wall 1	1	DRYWALL
Interior Wall 2		
Interior Floor 1	3	HARDWOOD
Interior Floor 2	4	CARPET
Heat Fuel	2	GAS
Heat Type	1	FORCED H/A
AC Type	03	FULL
Bedrooms	3	
Full Baths	2	
Half Baths	1	
Extra Fixtures	5	
Total Rooms	7	
Bath Style	G	GOOD
Half Bath Style	G	GOOD
Kitchens	1	
Kitchen Style	G	GOOD
Extra Kitchens		
Extra Kitchen St		
FBM Sqft		
FBM Quality		
FIN ATC Sqft		
FIN ATC Quality		
Fireplaces		
WS Flues		

CONSTRUCTION DETAIL (CONTINUED)

Element	Cd	Description
Central Vac	1	YES
Basement Floor	12	CONCRETE
Bsmt Garage		
Units	1	

MIXED USE

Code	Description	Percentage
101	ONE FAM	100
		0
		0

COST / MARKET VALUATION

Adj Base Rate	108.21
RCN	757,085
Net Other Adj	
Year Built	2017
Effective Year Built	2022
Depreciation Code	GD
Remodel Rating	
Year Remodeled	
Depreciation %	3
Functional Obsol	
External Obsol	
Cost Trend Factor	1
Condition	
% Complete	
Overall % Condition	97
RCNLD	734,400
Dep % Ovr	
Dep Ovr Comment	
Misc Imp Ovr	
Misc Imp Ovr Comment	
Cost to Cure Ovr	
Cost to Cure Ovr Comment	

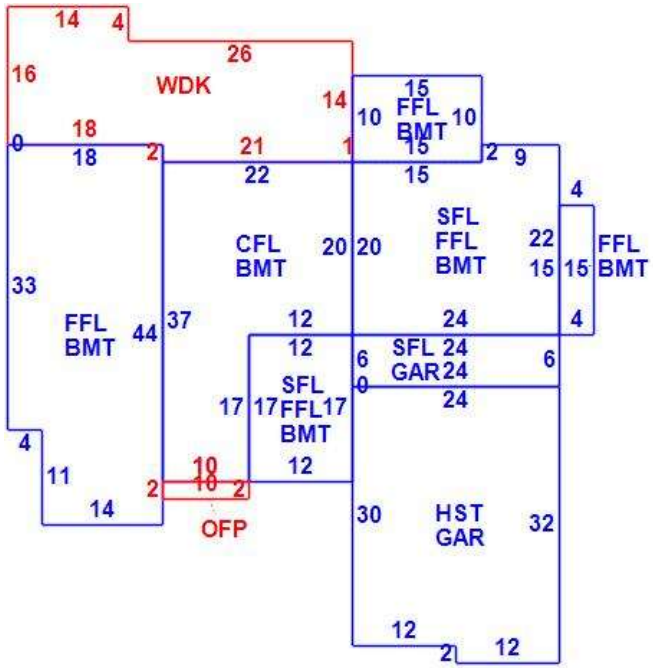

OB - OUTBUILDING & YARD ITEMS(L) / XF - BUILDING EXTRA FEATURES(B)

Code	Description	Su	Sub Type	Lan	Units	Unit Price	Yr Blt	%	Dep.	Cond	Gra	Qual	Apprais Va

BUILDING SUB-AREA SUMMARY SECTION

Subarea	Description	Living	Gross	Eff Area	Unit Cost	Undeprec Value
BMT	BASEMENT	0	2,270		34.16	77,536
CFL	CATHEDRAL CE	610	610		175.82	107,252
FFL	1ST FLOOR	1,660	1,660		170.78	283,501
GAR	GARAGE	0	888		68.28	60,628
HST	HALF STORY	372	744		85.39	63,532
OFP	OPEN PORCH	0	20		17.08	342
SFL	2ND FLOOR	846	846		170.78	144,483
WDK	WOOD DECK	0	580		34.16	19,811
	Ttl Gross Liv / Lease Area	3,488	7,618			757,085