Property Location 43 PEMBROKE TR | Map ID 31/ 17/ 7/ / | Bldg Name | State Use 101
Vision ID 6204 | Account # 6289 | Bldg # 1 | Sec # 1 of 1 | Card # 1 of 1 | Print Date 11/22/2025 12:02:29

| CURRENT OWNER | TOPO TYPE | UTILITY | STREET | LOCATION |
|---|---|---|---|---|
| VAIDYA RUBEN | | | | |
| AMATYA MONA | TOPO WET | EASEMENT | TRAFFIC | CORNER |
| 43 PEMBROKE TR | DRAINAGE | | VIEW | COMMUNITY |
| EAST LONGMEADOW MA 01028 | | | | |

GIS ID F_382115_2843963

**SUPPLEMENTAL DATA**

| | |
|---|---|
| Alt Prcl ID | Received |
| SP Permit | NIA |
| Chapter Land | Field 8 |
| OC Dates | Field 9 |
| In+Ex FY | Field 10 |
| Mailed | Assoc Pid# |

**CURRENT ASSESSMENT**

| Description | Code | Appraised | Assessed |
|---|---|---|---|
| RESIDNTL. | 101 | 536100 | 536,100 |
| RES LAND | 101 | 156000 | 156,000 |
| RESIDNTL. | 101 | 16100 | 16,100 |
| Total | | 708,200 | 708,200 |

1006
EAST LONGMEADOW

**RECORD OF OWNERSHIP**

| | BK-VOL/PAGE | | SALE DATE | Q/U | V/I | SALE PRICE | VC |
|---|---|---|---|---|---|---|---|
| VAIDYA RUBEN | 22009 | 6000 | 12-29-2017 | U | I | 455,000 | 1 |
| SNYDER R BRUCE | 11786 | 0043 | 07-31-2001 | U | I | 495,000 | |
| BRETTA THOMAS L, | 11358 | 0433 | 10-02-2000 | U | V | 240,000 | 1 |
| DAVIS JOHN H + STEPHEN A, | 09348 | 0253 | 12-27-1995 | U | V | 1 | |
| DAVIS JOHN H + STEPHEN A, | 00000 | 0000 | | U | | 0 | |

**PREVIOUS ASSESSMENTS (HISTORY)**

| Year | Code | Assessed | Year | Code | Assessed | Year | Code | Assessed |
|---|---|---|---|---|---|---|---|---|
| 2025 | 101 | 503,200 | 2024 | 101 | 472,700 | 2023 | 101 | 436,500 |
| | 101 | 156,000 | | 101 | 156,000 | | 101 | 142,000 |
| | 101 | 16,100 | | 101 | 16,100 | | 101 | 14,200 |
| | Total | 675,300 | | Total | 644,800 | | Total | 592,700 |

**EXEMPTIONS**

| Year | Code | Description | Amount |
|---|---|---|---|
| | | | |
| | | Total | |

**OTHER ASSESSMENTS**

| Code | Description | YEAR | Amount | Comm Int |
|---|---|---|---|---|
| | | | | |

This signature acknowledges a visit by a Data Collector or Assessor

**ASSESSING NEIGHBORHOOD**

| Nbhd | Nbhd Name | | Tracing | Batch |
|---|---|---|---|---|
| 0001 | | | 101 | NV |

**NOTES**

**APPRAISED VALUE SUMMARY**

| | |
|---|---|
| Appraised BLDG. Value (Card) | 536,100 |
| Appraised Xf (B) Value (Bldg) | 0 |
| Appraised Ob (B) Value (Bldg) | 16,100 |
| Appraised Land Value (Bldg) | 156,000 |
| Special Land Value | 0 |
| Total Appraised Parcel Value | 708,200 |
| Valuation Method | C |
| Adjustment | |
| Net Total Appraised Parcel Value | 708,200 |

**BUILDING PERMIT RECORD**

| Permit Id | Issue Date | Type | Description | Amount | Insp Date | % Comp | Date Comp | Comments |
|---|---|---|---|---|---|---|---|---|
| B-23-903 | 12-26-2023 | 91 | INSULATION | 6,200 | | 0 | | |
| 174 | 07-02-2001 | 7 | REMODEL | 25,000 | | | | PARTIAL FINISH BM |
| 161 | 06-24-2001 | 3 | GARAGE | 10,000 | | | | ATTACHED TWO C |
| 324 | 11-20-2000 | 2 | DWELLING | 200,000 | | | | |

**VISIT / CHANGE HISTORY**

| Date | Type | Is | Id | Cd | Purpose/Result |
|---|---|---|---|---|---|
| 08-14-2019 | | | 334 | 2 | MEASURED |
| 07-12-2013 | | | 317 | 2 | MEASURED |
| 02-14-2002 | | | 274 | 3 | MEAS+INSPCTD |
| 05-10-2001 | | | 247 | 2 | MEASURED |
| 05-10-2001 | | | 247 | 15 | PERMIT VISIT |

**LAND LINE VALUATION SECTION**

| B | Use Co | Description | Zone | D | Fronta | Depth | Land Units | | Unit Price | I. Fact | S.A. | Ac Di | C. Fact | St. Idx | Adj | Notes | Special Pricing | | | | Size A | Adj Unit Pric | Land Value |
|---|---|---|---|---|---|---|---|---|---|---|---|---|---|---|---|---|---|---|---|---|---|---|---|
| 1 | 101 | ONE FAM | RAA | | | | 40,000 | SF | 3.12 | 1.250 | 9 | LAND | 1.00 | NV | 1.00 | | | 0 | | | 1.000 | 3.9 | 156,000 |
| Total Card Land Units | | | | | | | 0.92 | AC | Parcel Total Land Area: | | | 0.92 | | | | | | | | | | Total Land Value | 156,000 |

Property Location 43 PEMBROKE TR | Map ID 31/ 17/ 7/ / | Bldg Name | State Use 101
Vision ID 6204 | Account # 6289 | Bldg # 1 | Sec # 1 of 1 | Card # 1 of 1 | Print Date 11/22/2025 12:02:30

## CONSTRUCTION DETAIL

| Element | Cd | Description |
|---|---|---|
| Style | 06 | COLONIAL |
| Model | 01 | RESIDENTIAL |
| Grade | B | GOOD |
| Stories | 2.00 | 2 STORY |
| Foundation | 1 | CONCRETE |
| Exterior Wall 1 | 4 | VINYL |
| Exterior Wall 2 | | |
| Roof Structure | 2 | HIP |
| Roof Cover | 1 | ASPHALT SH |
| Interior Wall 1 | 1 | DRYWALL |
| Interior Wall 2 | | |
| Interior Floor 1 | 3 | HARDWOOD |
| Interior Floor 2 | 4 | CARPET |
| Heat Fuel | 2 | GAS |
| Heat Type | 1 | FORCED H/A |
| AC Type | 03 | FULL |
| Bedrooms | 4 | |
| Full Baths | 3 | |
| Half Baths | 1 | |
| Extra Fixtures | 4 | |
| Total Rooms | 8 | |
| Bath Style | G | GOOD |
| Half Bath Style | G | GOOD |
| Kitchens | 1 | |
| Kitchen Style | G | GOOD |
| Extra Kitchens | 0 | |
| Extra Kitchen St | | |
| FBM Sqft | 1200 | |
| FBM Quality | 5 | |
| FIN ATC Sqft | | |
| FIN ATC Quality | | |
| Fireplaces | 2 | |
| WS Flues | | |

## CONSTRUCTION DETAIL (CONTINUED)

| Element | Cd | Description |
|---|---|---|
| Central Vac | 0 | NO |
| Basement Floor | 12 | CONCRETE |
| Bsmt Garage | | |
| Units | 1 | |

## MIXED USE

| Code | Description | Percentage |
|---|---|---|
| 101 | ONE FAM | 100 |
| | | 0 |
| | | 0 |

## COST / MARKET VALUATION

| | |
|---|---|
| Adj Base Rate | 123.66 |
| RCN | 616,151 |
| Net Other Adj | |
| Year Built | 2001 |
| Effective Year Built | 2012 |
| Depreciation Code | GD |
| Remodel Rating | |
| Year Remodeled | |
| Depreciation % | 13 |
| Functional Obsol | |
| External Obsol | |
| Cost Trend Factor | 1 |
| Condition | |
| % Complete | |
| Overall % Condition | 87 |
| RCNLD | 536,100 |
| Dep % Ovr | |
| Dep Ovr Comment | |
| Misc Imp Ovr | |
| Misc Imp Ovr Comment | |
| Cost to Cure Ovr | |
| Cost to Cure Ovr Comment | |

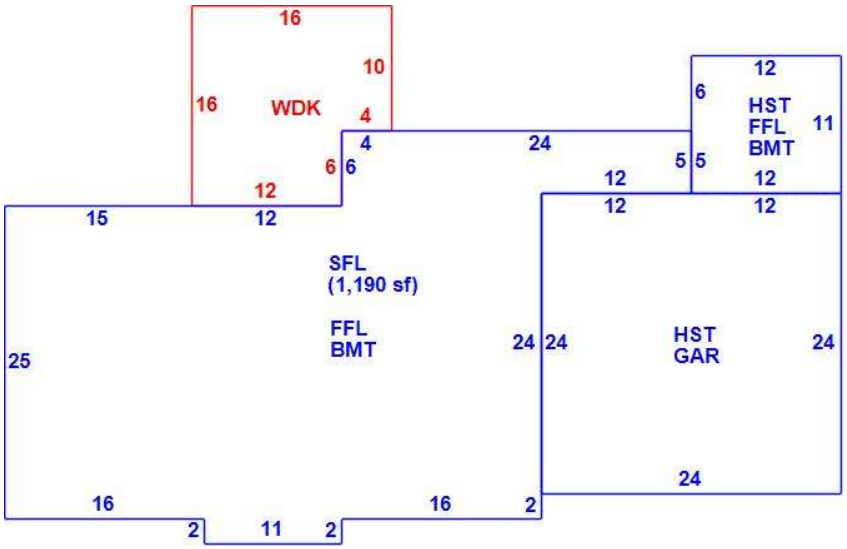


## OB - OUTBUILDING & YARD ITEMS(L) / XF - BUILDING EXTRA FEATURES(B)

| Code | Description | Su | Sub Type | Lan | Units | Unit Price | Yr Blt | % | Dep. | Cond | Gra | Qual | Apprais Va |
|---|---|---|---|---|---|---|---|---|---|---|---|---|---|
| 03 | GARAGE | OB | Outbuildi | L | 576 | 32.00 | 2001 | 70 | 0.00 | GD | G | 1.25 | 16,100 |

## BUILDING SUB-AREA SUMMARY SECTION

| Subarea | Description | Living | Gross | Eff Area | Unit Cost | Undeprec Value |
|---|---|---|---|---|---|---|
| BMT | BASEMENT | 0 | 1,385 | | 35.39 | 49,016 |
| FFL | 1ST FLOOR | 1,385 | 1,385 | | 176.95 | 245,080 |
| GAR | GARAGE | 0 | 576 | | 70.66 | 40,699 |
| HST | HALF STORY | 354 | 708 | | 88.48 | 62,641 |
| SFL | 2ND FLOOR | 1,190 | 1,190 | | 176.95 | 210,574 |
| WDK | WOOD DECK | 0 | 232 | | 35.09 | 8,140 |
| | Ttl Gross Liv / Lease Area | 2,929 | 5,476 | | | 616,151 |