Property Location 61 NOTTINGHAM DR | Map ID 75/ 53/ 6/ / | Bldg Name | State Use 101
Vision ID 6430 | Account # 6532 | Bldg # 1 | Sec # 1 of 1 | Card # 1 of 1 | Print Date 11/22/2025 12:34:57

CURRENT OWNER	TOPO TYPE	UTILITY	STREET	LOCATION
JOYCE KAREN A				
JOYCE ALFRED C JR	TOPO WET	EASEMENT	TRAFFIC	CORNER
61 NOTTINGHAM DR	DRAINAGE		VIEW	COMMUNITY
EAST LONGMEADOW MA 01028				

GIS ID F_392203_2849794

SUPPLEMENTAL DATA

Alt Prcl ID		Received	
SP Permit		NIA	
Chapter Land		Field 8	
OC Dates	9/20/2011	Field 9	
In+Ex FY		Field 10	
Mailed		Assoc Pid#	

CURRENT ASSESSMENT

Description	Code	Appraised	Assessed
RESIDNTL.	101	821600	821,600
RES LAND	101	150500	150,500
RESIDNTL.	101	23700	23,700
Total		995,800	995,800

1006
EAST LONGMEADOW

RECORD OF OWNERSHIP

	BK-VOL/PAGE		SALE DATE	Q/U	V/I	SALE PRICE	VC
JOYCE KAREN A	19024	0102	12-02-2011	U	I	1	1A
JOYCE KAREN A,	18210	0217	03-05-2010	U	V	151,500	1P
IELLAMO,PAUL	13920	0514	01-12-2004	U	V	125,000	
PECOY,JASON F	12629	0073	10-09-2002	U	V	80,000	1B
APPLE LAND,DEVELOPMENT INC	11956	0108	10-31-2001	U	V	1	1F

PREVIOUS ASSESSMENTS (HISTORY)

Year	Code	Assessed	Year	Code	Assessed	Year	Code	Assessed
2025	101	769,700	2024	101	720,800	2023	101	670,700
	101	150,500		101	150,500		101	135,900
	101	23,700		101	23,700		101	22,400
	Total	943,900		Total	895,000		Total	829,000

EXEMPTIONS

Year	Code	Description	Amount
		Total	

OTHER ASSESSMENTS

Code	Description	YEAR	Amount	Comm Int

This signature acknowledges a visit by a Data Collector or Assessor

ASSESSING NEIGHBORHOOD

Nbhd	Nbhd Name		Tracing	Batch
0001			101	NV

NOTES

APPRAISED VALUE SUMMARY

Appraised BLDG. Value (Card)	821,600
Appraised Xf (B) Value (Bldg)	0
Appraised Ob (B) Value (Bldg)	23,700
Appraised Land Value (Bldg)	150,500
Special Land Value	0
Total Appraised Parcel Value	995,800
Valuation Method	C
Adjustment	
Net Total Appraised Parcel Value	995,800

BUILDING PERMIT RECORD

Permit Id	Issue Date	Type	Description	Amount	Insp Date	% Comp	Date Comp	Comments
201202759	07-18-2012	62	SOLAR	39,450		0		PLANS CANCELLE
201202663	07-12-2012	11	POOL	36,000				20X41 INGROUND
237	07-20-2010	2	DWELLING	275,000				OC 9/20/11

VISIT / CHANGE HISTORY

Date	Type	Is	Id	Cd	Purpose/Result
04-04-2014			317	15	PERMIT VISIT
05-28-2013			317	15	PERMIT VISIT
05-28-2013			317	15	PERMIT VISIT
11-13-2012			250	24	ABATEMENT VI
01-20-2012			317	16	FIELDREV CHG
09-13-2011			400	25	OC VISIT
12-16-2010			317	2	MEASURED

LAND LINE VALUATION SECTION

B	Use Co	Description	Zone	D	Fronta	Depth	Land Units		Unit Price	I. Fact	S.A.	Ac Di	C. Fact	St. Idx	Adj	Notes	Special Pricing				Size A	Adj Unit Pric	Land Value
1	101	ONE FAM	RA				28,669	SF	4.20	1.250	9	LAND	1.00	NV	1.00			0			1.000	5.25	150,500
						Total Card Land Units	0.66	AC	Parcel Total Land Area:			0.66										Total Land Value	150,500

Property Location 61 NOTTINGHAM DR | Map ID 75/ 53/ 6/ / | Bldg Name | State Use 101
Vision ID 6430 | Account # 6532 | Bldg # 1 | Sec # 1 of 1 | Card # 1 of 1 | Print Date 11/22/2025 12:34:57

CONSTRUCTION DETAIL

Element	Cd	Description
Style	06	COLONIAL
Model	01	RESIDENTIAL
Grade	B+	GOOD (+)
Stories	2.50	2 1/2 STORIES
Foundation	1	CONCRETE
Exterior Wall 1	4	VINYL
Exterior Wall 2	8	BRICK VENR
Roof Structure	2	HIP
Roof Cover	1	ASPHALT SH
Interior Wall 1	1	DRYWALL
Interior Wall 2		
Interior Floor 1	3	HARDWOOD
Interior Floor 2		
Heat Fuel	2	GAS
Heat Type	1	FORCED H/A
AC Type	03	FULL
Bedrooms	4	
Full Baths	4	
Half Baths	1	
Extra Fixtures	5	
Total Rooms	11	
Bath Style	V	VERY GOOD
Half Bath Style	G	GOOD
Kitchens	1	
Kitchen Style	V	V GOOD
Extra Kitchens	0	
Extra Kitchen St	N	NONE
FBM Sqft	916	
FBM Quality	3	
FIN ATC Sqft		
FIN ATC Quality		
Fireplaces	1	
WS Flues	0	

CONSTRUCTION DETAIL (CONTINUED)

Element	Cd	Description
Central Vac	1	YES
Basement Floor	12	CONCRETE
Bsmt Garage	0	
Units	1	

MIXED USE

Code	Description	Percentage
101	ONE FAM	100
		0
		0

COST / MARKET VALUATION

Adj Base Rate	103.21
RCN	893,024
Net Other Adj	
Year Built	2010
Effective Year Built	2017
Depreciation Code	GD
Remodel Rating	
Year Remodeled	
Depreciation %	8
Functional Obsol	
External Obsol	
Cost Trend Factor	1
Condition	
% Complete	
Overall % Condition	92
RCNLD	821,600
Dep % Ovr	
Dep Ovr Comment	
Misc Imp Ovr	
Misc Imp Ovr Comment	
Cost to Cure Ovr	
Cost to Cure Ovr Comment	

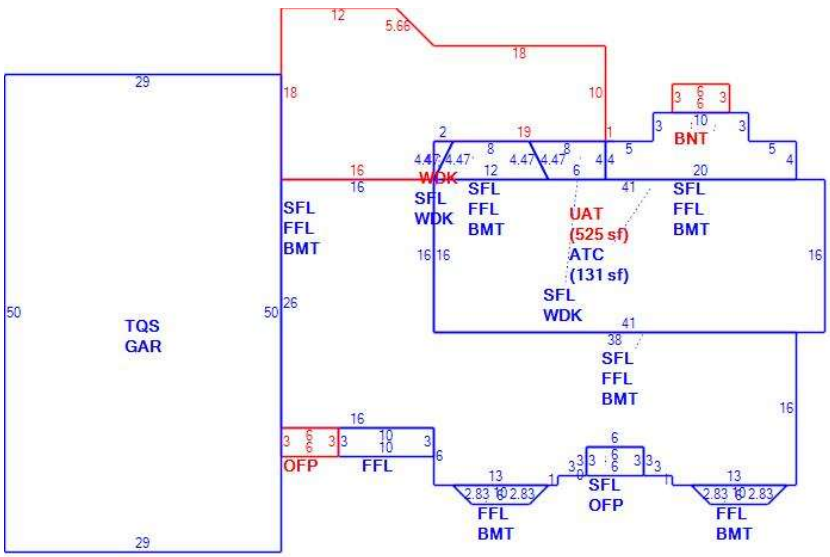

OB - OUTBUILDING & YARD ITEMS(L) / XF - BUILDING EXTRA FEATURES(B)

Code	Description	Su	Sub Type	Lan	Units	Unit Price	Yr Blt	%	Dep.	Cond	Gra	Qual	Apprais Va
02	SHED/FR			L	320	12.00	2010	70	0.00	GD	G	1.25	3,400
11	POOL I-V	OB	Outbuildi	L	800	29.00	2012	70	0.00	GD	G	1.25	20,300

BUILDING SUB-AREA SUMMARY SECTION

Subarea	Description	Living	Gross	Eff Area	Unit Cost	Undeprec Value
ATC	ATTIC	33	131		37.57	4,922
BMT	BASEMENT	0	1,832		29.80	54,593
BNT	BSMT ENTRY	0	18		8.29	149
FFL	1ST FLOOR	1,862	1,862		149.16	277,737
GAR	GARAGE	0	1,450		59.66	86,513
OFP	OPEN PORCH	0	36		16.57	597
SFL	2ND FLOOR	1,850	1,850		149.16	275,947
TQS	3/4 STORY	1,088	1,450		111.92	162,287
UAT	UNFIN ATTC	0	525		29.83	15,662
WDK	WOOD DECK	0	492		29.71	14,618
	Ttl Gross Liv / Lease Area	4,833	9,646			893,024