Property Location 151 NOTTINGHAM DR | Map ID 75/ 62/ 18/ / | Bldg Name | State Use 101
Vision ID 6438 | Account # 6540 | Bldg # 1 | Sec # 1 of 1 | Card # 1 of 1 | Print Date 11/22/2025 12:36:09

CURRENT OWNER	TOPO TYPE	UTILITY	STREET	LOCATION
RAVELLI MASSIMO E				
RAVELLI SANDRA	TOPO WET	EASEMENT	TRAFFIC	CORNER
151 NOTTINGHAM DR	DRAINAGE		VIEW	COMMUNITY
EAST LONGMEADOW MA 01028				

SUPPLEMENTAL DATA

Alt Prcl ID	Received
SP Permit	NIA
Chapter Land	Field 8
OC Dates	Field 9
In+Ex FY	Field 10
Mailed	Assoc Pid#

GIS ID F_391733_2850602

CURRENT ASSESSMENT

Description	Code	Appraised	Assessed
RESIDNTL.	101	588000	588,000
RES LAND	101	126500	126,500
RESIDNTL.	101	500	500
Total		715,000	715,000

1006
EAST LONGMEADOW

RECORD OF OWNERSHIP

	BK-VOL/PAGE		SALE DATE	Q/U	V/I	SALE PRICE	VC
RAVELLI MASSIMO E	12753	0574	11-20-2002	U	V	89,900	1P
APPLE LAND,DEVELOPMENT INC	11946	0104	10-31-2001	U	V	1	1F
ROLLINS,ROBERT H	11632	0459	05-10-2001	U	V	453,000	1
ROLLINS,ROBERT H	00000	0000		U		0	

PREVIOUS ASSESSMENTS (HISTORY)

Year	Code	Assessed	Year	Code	Assessed	Year	Code	Assessed
2025	101	497,700	2024	101	465,400	2023	101	432,300
	101	126,500		101	126,500		101	115,700
	101	500		101	500		101	300
	Total	624,700		Total	592,400		Total	548,300

EXEMPTIONS

Year	Code	Description	Amount
		Total	

OTHER ASSESSMENTS

Code	Description	YEAR	Amount	Comm Int

This signature acknowledges a visit by a Data Collector or Assessor

ASSESSING NEIGHBORHOOD

Nbhd	Nbhd Name		Tracing	Batch
0001			101	NV

NOTES

APPRAISED VALUE SUMMARY

Appraised BLDG. Value (Card)	588,000
Appraised Xf (B) Value (Bldg)	0
Appraised Ob (B) Value (Bldg)	500
Appraised Land Value (Bldg)	126,500
Special Land Value	0
Total Appraised Parcel Value	715,000
Valuation Method	C
Adjustment	
Net Total Appraised Parcel Value	715,000

BUILDING PERMIT RECORD

Permit Id	Issue Date	Type	Description	Amount	Insp Date	% Comp	Date Comp	Comments
B-24-640	10-21-2024	4	ADDITION	85,500	07-09-2025	100	07-09-2025	INLAW ADDITION -
201900705	03-08-2019	91	INSULATION	5,000		0		
329	09-27-2006	7	REMODEL	2,500				FINISH BMT NOT S
32	03-16-2004	7	REMODEL	2,000				OC 10/12/2004 - NV
269	10-10-2003	17	DECK	5,100				OC 10/12/2004
15	02-12-2003	2	DWELLING	249,000				OC 9/29/2003

VISIT / CHANGE HISTORY

Date	Type	Is	Id	Cd	Purpose/Result
07-09-2025			334	15	PERMIT VISIT
08-07-2019			334	2	MEASURED
01-14-2011			317	15	PERMIT VISIT
02-09-2010			316	1	LEFT NOTICE
01-30-2009			317	15	PERMIT VISIT
03-21-2008			317	15	PERMIT VISIT
03-08-2007			311	15	PERMIT VISIT

LAND LINE VALUATION SECTION

B	Use Co	Description	Zone	D	Fronta	Depth	Land Units		Unit Price	I. Fact	S.A.	Ac Di	C. Fact	St. Idx	Adj	Notes	Special Pricing				Size A	Adj Unit Pric	Land Value
1	101	ONE FAM	RA				40,000	SF	3.12	1.250	9	LAND	0.75	NV	1.00	WET3		0			1.000	2.93	117,200
1	101	ONE FAM	RA				1.330	AC	7,000.00	1.000	0		1.00	NV	1.00			0			1.000	7,000	9,300
						Total Card Land Units	2.25	AC	Parcel Total Land Area:		2.25											Total Land Value	126,500

Property Location 151 NOTTINGHAM DR | Map ID 75/ 62/ 18/ / | Bldg Name | State Use 101
Vision ID 6438 | Account # 6540 | Bldg # 1 | Sec # 1 of 1 | Card # 1 of 1 | Print Date 11/22/2025 12:36:10

CONSTRUCTION DETAIL

Element	Cd	Description
Style	06	COLONIAL
Model	01	RESIDENTIAL
Grade	B+	GOOD (+)
Stories	2.00	2 STORY
Foundation	1	CONCRETE
Exterior Wall 1	4	VINYL
Exterior Wall 2		
Roof Structure	2	HIP
Roof Cover	1	ASPHALT SH
Interior Wall 1	1	DRYWALL
Interior Wall 2		
Interior Floor 1	3	HARDWOOD
Interior Floor 2	4	CARPET
Heat Fuel	2	GAS
Heat Type	1	FORCED H/A
AC Type	03	FULL
Bedrooms	5	
Full Baths	3	
Half Baths	1	
Extra Fixtures	2	
Total Rooms	10	
Bath Style	G	GOOD
Half Bath Style	A	AVERAGE
Kitchens	1	
Kitchen Style	G	GOOD
Extra Kitchens	1	
Extra Kitchen St	A	AVERAGE
FBM Sqft	701	
FBM Quality	5	
FIN ATC Sqft		
FIN ATC Quality		
Fireplaces	1	
WS Flues	0	

CONSTRUCTION DETAIL (CONTINUED)

Element	Cd	Description
Central Vac	0	NO
Basement Floor	12	CONCRETE
Bsmt Garage	2	
Units	1	

MIXED USE

Code	Description	Percentage
101	ONE FAM	100
		0
		0

COST / MARKET VALUATION

Adj Base Rate	117.35
RCN	646,165
Net Other Adj	
Year Built	2003
Effective Year Built	2016
Depreciation Code	GV
Remodel Rating	03
Year Remodeled	2024
Depreciation %	9
Functional Obsol	
External Obsol	
Cost Trend Factor	1
Condition	
% Complete	
Overall % Condition	91
RCNLD	588,000
Dep % Ovr	
Dep Ovr Comment	
Misc Imp Ovr	
Misc Imp Ovr Comment	
Cost to Cure Ovr	
Cost to Cure Ovr Comment	

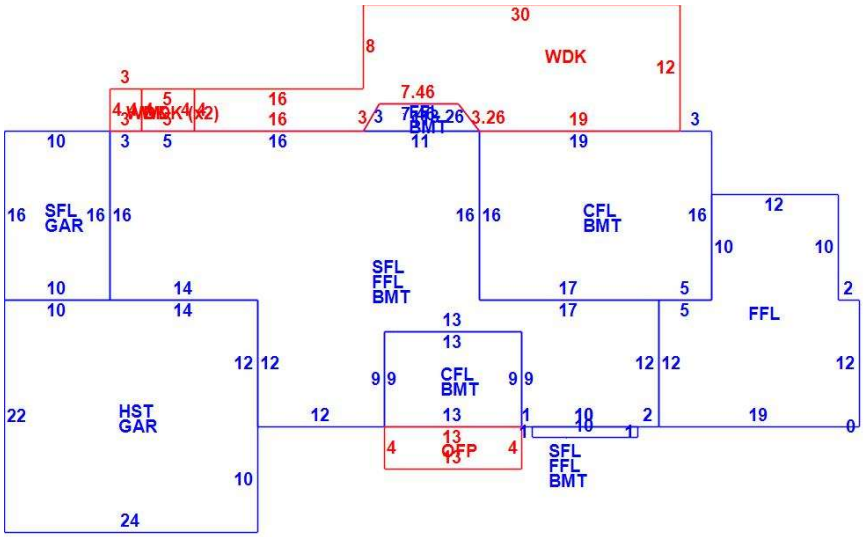

OB - OUTBUILDING & YARD ITEMS(L) / XF - BUILDING EXTRA FEATURES(B)

Code	Description	Su	Sub Type	Lan	Units	Unit Price	Yr Blt	%	Dep.	Cond	Gra	Qual	Apprais Va
19	PATIO			L	100	8.00	2015	60	0.00	AV	A	1.00	500

BUILDING SUB-AREA SUMMARY SECTION

Subarea	Description	Living	Gross	Eff Area	Unit Cost	Undeprec Value
BMT	BASEMENT	0	1,402		34.44	48,286
CFL	CATHEDRAL CE	469	469		177.60	83,293
FFL	1ST FLOOR	1,281	1,281		172.45	220,907
GAR	GARAGE	0	688		68.93	47,423
HST	HALF STORY	264	528		86.22	45,526
OFP	OPEN PORCH	0	52		16.58	862
SFL	2ND FLOOR	1,069	1,069		172.45	184,348
WDK	WOOD DECK	0	452		34.34	15,520
	Ttl Gross Liv / Lease Area	3,083	5,941			646,165