Property Location 106 NOTTINGHAM DR | Map ID 75/ 67/ 31/ / | Bldg Name | State Use 101
Vision ID 6447 | Account # 6549 | Bldg # 1 | Sec # 1 of 1 | Card # 1 of 1 | Print Date 11/22/2025 12:37:29

| CURRENT OWNER | TOPO TYPE | UTILITY | STREET | LOCATION |
|---|---|---|---|---|
| GRISARU ALEXANDER | | | | |
| GRISARU ANNA MARIA | **TOPO WET** | **EASEMENT** | **TRAFFIC** | **CORNER** |
| 106 NOTTINGHAM DR | **DRAINAGE** | | **VIEW** | **COMMUNITY** |
| EAST LONGMEADOW MA 01028 | | | | |

**SUPPLEMENTAL DATA**

| | |
|---|---|
| Alt Prcl ID | Received |
| SP Permit | NIA |
| Chapter Land | Field 8 |
| OC Dates | Field 9 |
| In+Ex FY | Field 10 |
| Mailed | Assoc Pid# |

GIS ID F_392503_2850251

**CURRENT ASSESSMENT**

| Description | Code | Appraised | Assessed |
|---|---|---|---|
| RESIDNTL. | 101 | 512900 | 512,900 |
| RES LAND | 101 | 153700 | 153,700 |
| RESIDNTL. | 101 | 18900 | 18,900 |
| Total | | 685,500 | 685,500 |

1006
EAST LONGMEADOW

**RECORD OF OWNERSHIP**

| | BK-VOL/PAGE | | SALE DATE | Q/U | V/I | SALE PRICE | VC |
|---|---|---|---|---|---|---|---|
| GRISARU ALEXANDER | 24618 | 0443 | 06-30-2022 | Q | I | 670,000 | 00 |
| ROGERS SCOTT E | 13872 | 0331 | 12-30-2003 | U | V | 99,900 | |
| R E LAPLANTE CONSTRUCTION INC, | 12506 | 0391 | 08-07-2002 | U | V | 542,000 | 1 |
| APPLE LAND ,DEVELOPMENT INC | 11946 | 0104 | 10-31-2001 | U | V | 1 | 1F |
| ROLLINS,ROBERT H | 11632 | 0459 | 05-10-2001 | U | V | 453,000 | 1 |

**PREVIOUS ASSESSMENTS (HISTORY)**

| Year | Code | Assessed | Year | Code | Assessed | Year | Code | Assessed |
|---|---|---|---|---|---|---|---|---|
| 2025 | 101 | 479,200 | 2024 | 101 | 442,600 | 2023 | 101 | 410,700 |
| | 101 | 153,700 | | 101 | 153,700 | | 101 | 138,500 |
| | 101 | 18,900 | | 101 | 18,900 | | 101 | 18,400 |
| | Total | 651,800 | | Total | 615,200 | | Total | 567,600 |

**EXEMPTIONS**

| Year | Code | Description | Amount |
|---|---|---|---|
| | | | |
| | | Total | |

**OTHER ASSESSMENTS**

| Code | Description | YEAR | Amount | Comm Int |
|---|---|---|---|---|
| | | | | |

This signature acknowledges a visit by a Data Collector or Assessor

**APPRAISED VALUE SUMMARY**

| | |
|---|---|
| Appraised BLDG. Value (Card) | 512,900 |
| Appraised Xf (B) Value (Bldg) | 0 |
| Appraised Ob (B) Value (Bldg) | 18,900 |
| Appraised Land Value (Bldg) | 153,700 |
| Special Land Value | 0 |
| Total Appraised Parcel Value | 685,500 |
| Valuation Method | C |
| Adjustment | |
| Net Total Appraised Parcel Value | 685,500 |

**ASSESSING NEIGHBORHOOD**

| Nbhd | Nbhd Name | | Tracing | Batch |
|---|---|---|---|---|
| 0001 | | | 101 | NV |

**NOTES**

SUB DIV #875

**BUILDING PERMIT RECORD**

| Permit Id | Issue Date | Type | Description | Amount | Insp Date | % Comp | Date Comp | Comments |
|---|---|---|---|---|---|---|---|---|
| B-25-280 | 05-16-2025 | 91 | INSULATION | 1,000 | | 0 | | |
| 76 | 04-22-2009 | 11 | POOL | 38,000 | | | | 8 X 36 INGROUND |
| 9 | 01-21-2004 | 2 | DWELLING | 260,000 | | | | OC 7/28/2004 |

**VISIT / CHANGE HISTORY**

| Date | Type | Is | Id | Cd | Purpose/Result |
|---|---|---|---|---|---|
| 06-25-2018 | | | 333 | 2 | MEASURED |
| 02-09-2010 | | | 316 | 15 | PERMIT VISIT |
| 05-04-2006 | | | 105 | 16 | FIELDREV CHG |
| 09-10-2004 | | | 311 | 3 | MEAS+INSPCTD |

**LAND LINE VALUATION SECTION**

| B | Use Co | Description | Zone | D | Fronta | Depth | Land Units | | Unit Price | I. Fact | S.A. | Ac Di | C. Fact | St. Idx | Adj | Notes | Special Pricing | | | | Size A | Adj Unit Pric | Land Value |
|---|---|---|---|---|---|---|---|---|---|---|---|---|---|---|---|---|---|---|---|---|---|---|---|
| 1 | 101 | ONE FAM | RA | | | | 33,125 | SF | 3.71 | 1.250 | 9 | LAND | 1.00 | NV | 1.00 | | | 0 | | | 1.000 | 4.64 | 153,700 |
| | | | | | | Total Card Land Units | 0.76 | AC | Parcel Total Land Area: | | | 0.76 | | | | | | | | | | Total Land Value | 153,700 |

Property Location 106 NOTTINGHAM DR | Map ID 75/ 67/ 31/ / | Bldg Name | State Use 101
Vision ID 6447 | Account # 6549 | Bldg # 1 | Sec # 1 of 1 | Card # 1 of 1 | Print Date 11/22/2025 12:37:30

## CONSTRUCTION DETAIL

| Element | Cd | Description |
|---|---|---|
| Style | 06 | COLONIAL |
| Model | 01 | RESIDENTIAL |
| Grade | B+ | GOOD (+) |
| Stories | 2.00 | 2 STORY |
| Foundation | 1 | CONCRETE |
| Exterior Wall 1 | 4 | VINYL |
| Exterior Wall 2 | | |
| Roof Structure | 1 | GABLE |
| Roof Cover | 1 | ASPHALT SH |
| Interior Wall 1 | 1 | DRYWALL |
| Interior Wall 2 | | |
| Interior Floor 1 | 3 | HARDWOOD |
| Interior Floor 2 | | |
| Heat Fuel | 2 | GAS |
| Heat Type | 1 | FORCED H/A |
| AC Type | 03 | FULL |
| Bedrooms | 4 | |
| Full Baths | 2 | |
| Half Baths | 1 | |
| Extra Fixtures | 0 | |
| Total Rooms | 8 | |
| Bath Style | G | GOOD |
| Half Bath Style | G | GOOD |
| Kitchens | 1 | |
| Kitchen Style | G | GOOD |
| Extra Kitchens | 0 | |
| Extra Kitchen St | | |
| FBM Sqft | 500 | |
| FBM Quality | 1 | |
| FIN ATC Sqft | | |
| FIN ATC Quality | | |
| Fireplaces | 1 | |
| WS Flues | | |

## CONSTRUCTION DETAIL (CONTINUED)

| Element | Cd | Description |
|---|---|---|
| Central Vac | 1 | YES |
| Basement Floor | 12 | CONCRETE |
| Bsmt Garage | | |
| Units | 1 | |

## MIXED USE

| Code | Description | Percentage |
|---|---|---|
| 101 | ONE FAM | 100 |
| | | 0 |
| | | 0 |

## COST / MARKET VALUATION

| | |
|---|---|
| Adj Base Rate | 121.90 |
| RCN | 603,353 |
| Net Other Adj | |
| Year Built | 1997 |
| Effective Year Built | 2010 |
| Depreciation Code | GD |
| Remodel Rating | |
| Year Remodeled | |
| Depreciation % | 15 |
| Functional Obsol | |
| External Obsol | |
| Cost Trend Factor | 1 |
| Condition | |
| % Complete | |
| Overall % Condition | 85 |
| RCNLD | 512,900 |
| Dep % Ovr | |
| Dep Ovr Comment | |
| Misc Imp Ovr | |
| Misc Imp Ovr Comment | |
| Cost to Cure Ovr | |
| Cost to Cure Ovr Comment | |

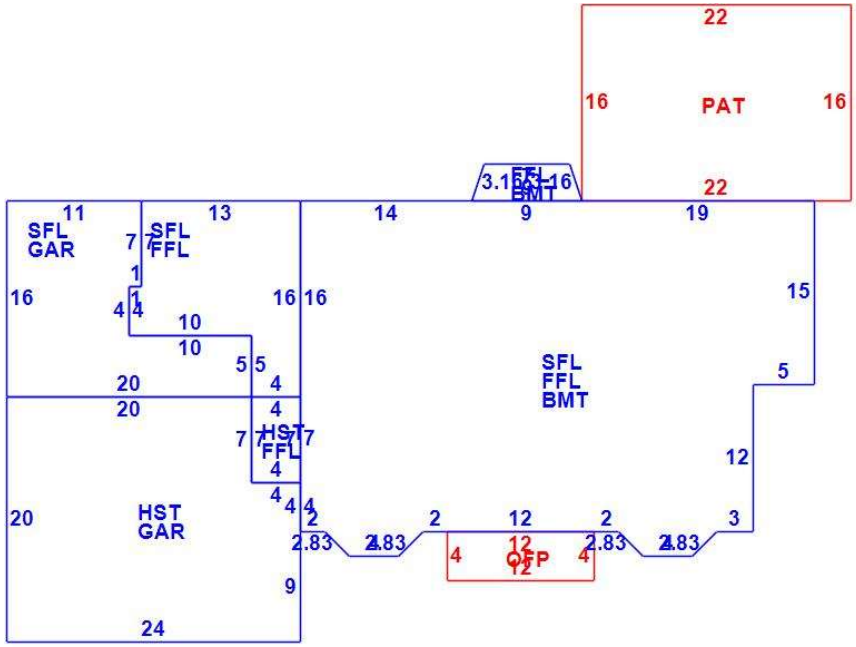

## OB - OUTBUILDING & YARD ITEMS(L) / XF - BUILDING EXTRA FEATURES(B)

| Code | Description | Su | Sub Type | Lan | Units | Unit Price | Yr Blt | % | Dep. | Cond | Gra | Qual | Apprais Va |
|---|---|---|---|---|---|---|---|---|---|---|---|---|---|
| 19 | PATIO | | | L | 345 | 8.00 | 2003 | 70 | 0.00 | GD | A | 1.00 | 1,900 |
| 10 | POOL I-C | | | L | 648 | 29.90 | 2009 | 70 | 0.00 | GD | G | 1.25 | 17,000 |

## BUILDING SUB-AREA SUMMARY SECTION

| Subarea | Description | Living | Gross | Eff Area | Unit Cost | Undeprec Value |
|---|---|---|---|---|---|---|
| BMT | BASEMENT | 0 | 1,122 | | 33.89 | 38,028 |
| FFL | 1ST FLOOR | 1,317 | 1,317 | | 169.77 | 223,584 |
| GAR | GARAGE | 0 | 669 | | 68.01 | 45,498 |
| HST | HALF STORY | 240 | 480 | | 84.88 | 40,744 |
| OFP | OPEN PORCH | 0 | 48 | | 17.68 | 849 |
| PAT | PATIO | 0 | 352 | | 8.68 | 3,056 |
| SFL | 2ND FLOOR | 1,482 | 1,482 | | 169.77 | 251,595 |
| | Ttl Gross Liv / Lease Area | 3,039 | 5,470 | | | 603,353 |