Property Location 507 CHESTNUT ST | Map ID 6/ 126/ B/ / | Bldg Name | State Use 101
Vision ID 6767 | Account # 6885 | Bldg # 1 | Sec # 1 of 1 | Card # 1 of 1 | Print Date 11/24/2025 9:04:56 A

CURRENT OWNER	TOPO TYPE	UTILITY	STREET	LOCATION
SALAMONE JOSEPHINE R				
	TOPO WET	EASEMENT	TRAFFIC	CORNER
507 CHESTNUT ST				
	DRAINAGE		VIEW	COMMUNITY
EAST LONGMEADOW MA 01028				

SUPPLEMENTAL DATA

Alt Prcl ID	Received
SP Permit	NIA
Chapter Land	Field 8
OC Dates	Field 9
In+Ex FY	Field 10
Mailed	Assoc Pid#

GIS ID F_375308_2847741

CURRENT ASSESSMENT

Description	Code	Appraised	Assessed
RESIDNTL.	101	377100	377,100
RES LAND	101	111000	111,000
Total		488,100	488,100

1006

EAST LONGMEADOW

RECORD OF OWNERSHIP

	BK-VOL/PAGE		SALE DATE	Q/U	V/I	SALE PRICE	VC
SALAMONE JOSEPHINE R	18389	0036	07-28-2010	U	I	246,000	1
TORCIA MIACHAEL A,	18161	0108	01-21-2010	U	V	65,000	1
WILLIAMS PETER C + MARIA L,	04685	0165	11-03-1978	U	I	0	

PREVIOUS ASSESSMENTS (HISTORY)

Year	Code	Assessed	Year	Code	Assessed	Year	Code	Assessed
2025	101	353,200	2024	101	330,600	2023	101	304,300
	101	111,000		101	111,000		101	100,700
	Total	464,200		Total	441,600		Total	405,000

EXEMPTIONS

Year	Code	Description	Amount
		Total	

OTHER ASSESSMENTS

Code	Description	YEAR	Amount	Comm Int

This signature acknowledges a visit by a Data Collector or Assessor

ASSESSING NEIGHBORHOOD

Nbhd	Nbhd Name		Tracing	Batch
0001			101	MA

NOTES

FY 2010 ACREAGE UPDATE BASED ON DEED
AND MAP FROM 1.25 TO 1.32AC-FY2011 SUB
1066-BK PLANS 357-15-DEED REF
18161-108(.082 AC +/-) FROM PARCEL
6-126-0 DRIVEWAY ESMT TO #509

APPRAISED VALUE SUMMARY

Appraised BLDG. Value (Card)	377,100
Appraised Xf (B) Value (Bldg)	0
Appraised Ob (B) Value (Bldg)	0
Appraised Land Value (Bldg)	111,000
Special Land Value	0
Total Appraised Parcel Value	488,100
Valuation Method	C
Adjustment	
Net Total Appraised Parcel Value	488,100

BUILDING PERMIT RECORD

Permit Id	Issue Date	Type	Description	Amount	Insp Date	% Comp	Date Comp	Comments
202002508	09-10-2020	4	ADDITION	40,000	07-14-2021	100	07-14-2021	18X18 MSTR BDRM
91	04-13-2010	2	DWELLING	140,000				OC 7/27/2010 30X3

VISIT / CHANGE HISTORY

Date	Type	Is	Id	Cd	Purpose/Result
07-14-2021			334	15	PERMIT VISIT
03-16-2018			333	2	MEASURED
07-27-2010			400	25	OC VISIT

LAND LINE VALUATION SECTION

B	Use Co	Description	Zone	D	Fronta	Depth	Land Units		Unit Price	I. Fact	S.A.	Ac Di	C. Fact	St. Idx	Adj	Notes	Special Pricing				Size A	Adj Unit Pric	Land Value
1	101	ONE FAM	RB				35,698	SF	3.46	1.000	5	LAND	1.00	MA	1.00			0	TRF2	0.9	1.000	3.11	111,000
						Total Card Land Units	0.82	AC	Parcel Total Land Area:			0.82										Total Land Value	111,000

Property Location 507 CHESTNUT ST | Map ID 6/ 126/ B/ / | Bldg Name | State Use 101
Vision ID 6767 | Account # 6885 | Bldg # 1 | Sec # 1 of 1 | Card # 1 of 1 | Print Date 11/24/2025 9:04:56 A

CONSTRUCTION DETAIL

Element	Cd	Description
Style	06	COLONIAL
Model	01	RESIDENTIAL
Grade	C+	AVG. (+)
Stories	2.00	2 STORY
Foundation	1	CONCRETE
Exterior Wall 1	4	VINYL
Exterior Wall 2		
Roof Structure	1	GABLE
Roof Cover	1	ASPHALT SH
Interior Wall 1	1	DRYWALL
Interior Wall 2		
Interior Floor 1	3	HARDWOOD
Interior Floor 2	4	CARPET
Heat Fuel	2	GAS
Heat Type	1	FORCED H/A
AC Type	03	FULL
Bedrooms	4	
Full Baths	3	
Half Baths	1	
Extra Fixtures	0	
Total Rooms	7	
Bath Style	G	GOOD
Half Bath Style	G	GOOD
Kitchens	1	
Kitchen Style	G	GOOD
Extra Kitchens	0	
Extra Kitchen St		
FBM Sqft		
FBM Quality		
FIN ATC Sqft		
FIN ATC Quality		
Fireplaces	1	
WS Flues		

CONSTRUCTION DETAIL (CONTINUED)

Element	Cd	Description
Central Vac	1	YES
Basement Floor	12	CONCRETE
Bsmt Garage	0	
Units	1	

MIXED USE

Code	Description	Percentage
101	ONE FAM	100
		0
		0

COST / MARKET VALUATION

Adj Base Rate	141.32
RCN	401,179
Net Other Adj	
Year Built	2010
Effective Year Built	2019
Depreciation Code	GV
Remodel Rating	03
Year Remodeled	2021
Depreciation %	6
Functional Obsol	
External Obsol	
Cost Trend Factor	1
Condition	
% Complete	
Overall % Condition	94
RCNLD	377,100
Dep % Ovr	
Dep Ovr Comment	
Misc Imp Ovr	
Misc Imp Ovr Comment	
Cost to Cure Ovr	
Cost to Cure Ovr Comment	

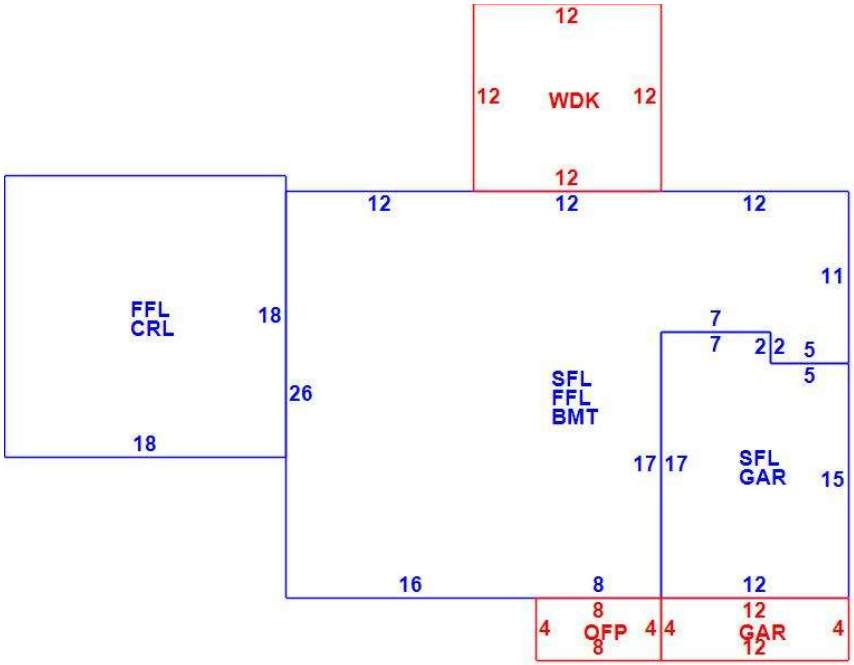

OB - OUTBUILDING & YARD ITEMS(L) / XF - BUILDING EXTRA FEATURES(B)

Code	Description	Su	Sub Type	Lan	Units	Unit Price	Yr Blt	%	Dep.	Cond	Gra	Qual	Apprais Va

BUILDING SUB-AREA SUMMARY SECTION

Subarea	Description	Living	Gross	Eff Area	Unit Cost	Undeprec Value
BMT	BASEMENT	0	742		34.87	25,871
CRL	CRAWL	0	324		8.63	2,797
FFL	1ST FLOOR	1,066	1,066		174.81	186,343
GAR	GARAGE	0	242		70.07	16,956
OFP	OPEN PORCH	0	32		16.39	524
SFL	2ND FLOOR	936	936		174.81	163,618
WDK	WOOD DECK	0	144		35.20	5,069
	Ttl Gross Liv / Lease Area	2,002	3,486			401,179