Property Location 14 HIDDEN PONDS DR | Map ID 23/ 77/ 7/ / | Bldg Name | State Use 101
Vision ID 7561 | Account # 7561 | Bldg # 1 | Sec # 1 of 1 | Card # 1 of 1 | Print Date 11/24/2025 9:34:11 A

CURRENT OWNER	TOPO TYPE	UTILITY	STREET	LOCATION
GOODWIN JANIS L				
GOODWIN WAYNE M	TOPO WET	EASEMENT	TRAFFIC	CORNER
14 HIDDEN PONDS DR	DRAINAGE		VIEW	COMMUNITY
EAST LONGMEADOW MA 01028				

GIS ID F_380839_2856919

SUPPLEMENTAL DATA

Alt Prcl ID		Received	
SP Permit		NIA	
Chapter Land		Field 8	
OC Dates	7/25/2022	Field 9	
In+Ex FY		Field 10	
Mailed		Assoc Pid#	

CURRENT ASSESSMENT

Description	Code	Appraised	Assessed
RESIDNTL.	101	594300	594,300
RES LAND	101	158200	158,200
Total		752,500	752,500

1006

EAST LONGMEADOW

RECORD OF OWNERSHIP

	BK-VOL/PAGE		SALE DATE	Q/U	V/I	SALE PRICE	VC
GOODWIN JANIS L	23462	0211	10-06-2020	Q	V	154,000	00
REDSTONE PONDS LLC TR	22438	0529	11-08-2018	U	V	471,000	1V

PREVIOUS ASSESSMENTS (HISTORY)

Year	Code	Assessed	Year	Code	Assessed	Year	Code	Assessed
2025	101	538,500	2024	101	501,700	2023	101	228,800
	101	158,200		101	158,200		101	144,200
	Total	696,700		Total	659,900		Total	373,000

EXEMPTIONS

Year	Code	Description	Amount
		Total	

OTHER ASSESSMENTS

Code	Description	YEAR	Amount	Comm Int

This signature acknowledges a visit by a Data Collector or Assessor

ASSESSING NEIGHBORHOOD

Nbhd	Nbhd Name		Tracing	Batch
0001				

NOTES

PS #1166 LOT 7

PLAN 35/32-34

APPRAISED VALUE SUMMARY

Appraised BLDG. Value (Card)	594,300
Appraised Xf (B) Value (Bldg)	0
Appraised Ob (B) Value (Bldg)	0
Appraised Land Value (Bldg)	158,200
Special Land Value	0
Total Appraised Parcel Value	752,500
Valuation Method	C
Adjustment	
Net Total Appraised Parcel Value	752,500

BUILDING PERMIT RECORD

Permit Id	Issue Date	Type	Description	Amount	Insp Date	% Comp	Date Comp	Comments
B-23-328	05-11-2023	62	SOLAR	16,864	06-02-2023	100	06-01-2023	23 PANELS
B-23-288	04-28-2023	62	SOLAR	42,712	06-02-2023	100	06-01-2023	DID NOT GO WITH
202102793	09-13-2021	2	DWELLING	552,500	06-09-2022	100	07-25-2022	2540 SF SFD, 624 G

VISIT / CHANGE HISTORY

Date	Type	Is	Id	Cd	Purpose/Result
06-02-2023			400	15	PERMIT VISIT
07-25-2022			400	25	OC VISIT
06-09-2022			334	15	PERMIT VISIT

LAND LINE VALUATION SECTION

B	Use Co	Description	Zone	D	Fronta	Depth	Land Units		Unit Price	I. Fact	S.A.	Ac Di	C. Fact	St. Idx	Adj	Notes	Special Pricing				Size A	Adj Unit Pric	Land Value
1	101	ONE FAM	RA				40,000	SF	3.12	1.250	9	LAND	1.00	NV	1.00			0			1.000	3.9	156,000
1	101	ONE FAM	RA				0.352	AC	7,000.00	1.000	0		0.90	NV	1.00	WET		0			1.000	6,300	2,200
						Total Card Land Units	1.27	AC	Parcel Total Land Area:	1.27												Total Land Value	158,200

Property Location 14 HIDDEN PONDS DR | Map ID 23/ 77/ 7/ / | Bldg Name | State Use 101
Vision ID 7561 | Account # 7561 | Bldg # 1 | Sec # 1 of 1 | Card # 1 of 1 | Print Date 11/24/2025 9:34:12 A

CONSTRUCTION DETAIL

Element	Cd	Description
Style	09	CONTEMPORY
Model	01	RESIDENTIAL
Grade	B+	GOOD (+)
Stories	1.00	1 STORY
Foundation	1	CONCRETE
Exterior Wall 1	4	VINYL
Exterior Wall 2		
Roof Structure	1	GABLE
Roof Cover	1	ASPHALT SH
Interior Wall 1	1	DRYWALL
Interior Wall 2		
Interior Floor 1	15	LAMINATE
Interior Floor 2	6	CERAMIC TL
Heat Fuel	2	GAS
Heat Type	1	FORCED H/A
AC Type	03	FULL
Bedrooms	3	
Full Baths	2	
Half Baths	1	
Extra Fixtures	4	
Total Rooms	6	
Bath Style	G	GOOD
Half Bath Style	G	GOOD
Kitchens	1	
Kitchen Style	G	GOOD
Extra Kitchens	0	
Extra Kitchen St	N	NONE
FBM Sqft		
FBM Quality		
FIN ATC Sqft		
FIN ATC Quality		
Fireplaces	1	
WS Flues	0	

CONSTRUCTION DETAIL (CONTINUED)

Element	Cd	Description
Central Vac	0	NO
Basement Floor	12	CONCRETE
Bsmt Garage	0	
Units	1	

MIXED USE

Code	Description	Percentage
101	ONE FAM	100
		0
		0

COST / MARKET VALUATION

Adj Base Rate	130.09
RCN	600,279
Net Other Adj	
Year Built	2022
Effective Year Built	2024
Depreciation Code	GD
Remodel Rating	
Year Remodeled	
Depreciation %	1
Functional Obsol	
External Obsol	
Cost Trend Factor	1
Condition	
% Complete	
Overall % Condition	99
RCNLD	594,300
Dep % Ovr	
Dep Ovr Comment	
Misc Imp Ovr	
Misc Imp Ovr Comment	
Cost to Cure Ovr	
Cost to Cure Ovr Comment	

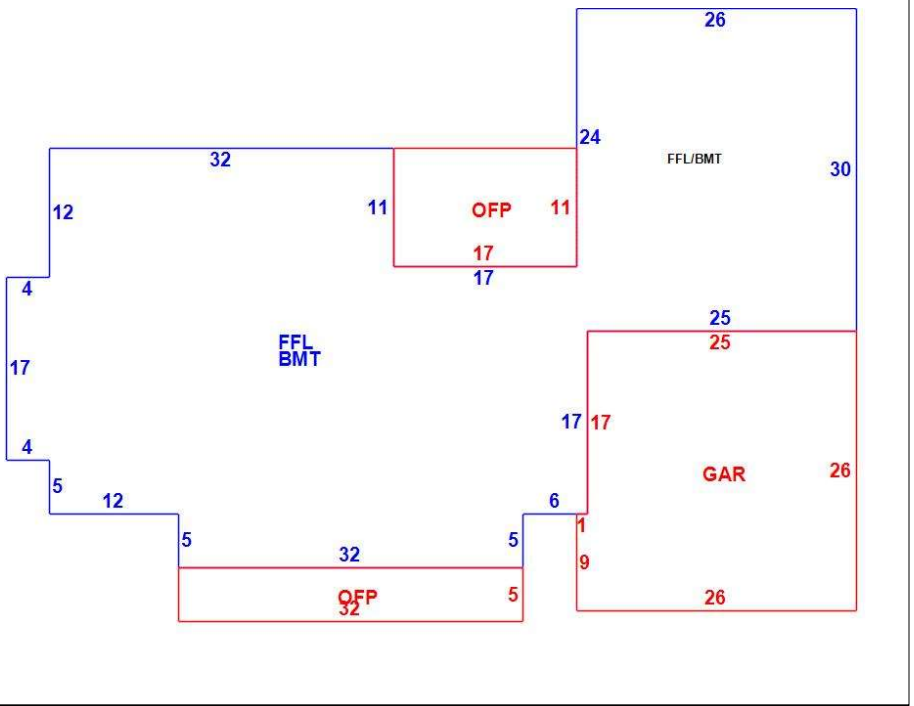

OB - OUTBUILDING & YARD ITEMS(L) / XF - BUILDING EXTRA FEATURES(B)

Code	Description	Su	Sub Type	Lan	Units	Unit Price	Yr Blt	%	Dep.	Cond	Gra	Qual	Apprais Va
SOL	Solar Panels	EX	Extra Fea	B	1	0.00	2024	99	1.00	AV	A	0.00	0

BUILDING SUB-AREA SUMMARY SECTION

Subarea	Description	Living	Gross	Eff Area	Unit Cost	Undeprec Value
BMT	BASEMENT	0	2,504		36.35	91,023
FFL	1ST FLOOR	2,504	2,504		181.68	454,933
GAR	GARAGE	0	659		72.78	47,964
OFP	OPEN PORCH	0	347		18.33	6,359
	Ttl Gross Liv / Lease Area	2,504	6,014			600,279